Avdel®

Instruction Manual

Original Instruction

Type 0727

07271 - 07274

Pneumatic Power Tool

AVDEL policy is one of continuous development. Specifications shown in this document may be subject to changes which may be introduced after publication. For the latest information always consult Avdel.

SPECIFICATIONS FOR 0727 TYPE TOOL

AIR PRESSURE	Minimum - Maximum	**5 - 8 bar**	70 - 120 lbf/in^2
FREE AIR VOLUME REQUIRED	07271	**1.72 litres**	.0605 ft^3
@ 5.5 bar / 80 lbf/in^2	07274	**1.15 litres**	.0403 ft^3
PULL FORCE	07271	**3.89 kN**	875 lbf
@ 4.8 bar / 70 lbf/in^2	07274	**2.45 kN**	550 lbf
CYCLE TIME	Approximately	**2.4 seconds**	
NOISE LEVEL	07271/4	**< 70 dB(A)**	
WEIGHT	07271	**2.35 kg**	5.17 lb
(WITHOUT NOSE EQUIPMENT)	07274	**1.94 kg**	4.33 lb
VIBRATION	07271	**< 2.5 m/s^2**	8 ft/s^2
	07274	**4.32 m/s^2**	14.17 ft/s^2

CONTENTS

SAFETY

General — 2
Specific to 0727 Tool — 3

INTENT OF USE

Tool Capability — 4
Tool Dimensions — 5

PUTTING INTO SERVICE

Air Supply — 6
Bush Stops — 7
Cursor — 7
Loading the Tool — 8
Reloading the Tool — 10
Operating Procedure — 10
Accessories — 10

NOSE EQUIPMENT

General — 11
Nose Jaw Selection — 11-14
Mandrel & Mandrel Follower Spring Selection — 15-20

SERVICING

Regular Servicing - Service Kit — 21
Maintenance — 22-24
General Assembly & Parts List — 25-26

FAULT DIAGNOSIS

Fault Diagnosis Table — 27

SAFETY

This instruction manual must be read with particular attention to the following safety rules, by any person installing, operating, or servicing this tool.

(!) DO NOT USE OUTSIDE THE DESIGN INTENT.

(!) DO NOT USE EQUIPMENT WITH THIS TOOL/MACHINE OTHER THAN THAT RECOMMENDED AND SUPPLIED BY AVDEL.

(!) ANY MODIFICATION UNDERTAKEN BY THE CUSTOMER TO THE TOOL/MACHINE, NOSE ASSEMBLIES, ACCESSORIES OR ANY EQUIPMENT SUPPLIED BY AVDEL OR THEIR REPRESENTATIVES, SHALL BE THE CUSTOMER'S ENTIRE RESPONSIBILITY. AVDEL WILL BE PLEASED TO ADVISE UPON ANY PROPOSED MODIFICATION.

(!) THE TOOL/MACHINE MUST BE MAINTAINED IN A SAFE WORKING CONDITION AT ALL TIMES AND EXAMINED AT REGULAR INTERVALS FOR DAMAGE AND FUNCTION BY TRAINED COMPETENT PERSONNEL. ANY DISMANTLING PROCEDURE SHALL BE UNDERTAKEN ONLY BY PERSONNEL TRAINED IN AVDEL PROCEDURES. DO NOT DISMANTLE THIS TOOL/MACHINE WITHOUT PRIOR REFERENCE TO THE MAINTENANCE INSTRUCTIONS. CONTACT AVDEL WITH YOUR TRAINING REQUIREMENTS.

(!) THE TOOL/MACHINE SHALL AT ALL TIMES BE OPERATED IN ACCORDANCE WITH RELEVANT HEALTH AND SAFETY LEGISLATION. IN THE U.K. THE "HEALTH AND SAFETY AT WORK ETC. ACT 1974" APPLIES. ANY QUESTION REGARDING THE CORRECT OPERATION OF THE TOOL/MACHINE AND OPERATOR SAFETY SHOULD BE DIRECTED TO AVDEL.

(!) THE PRECAUTIONS TO BE OBSERVED WHEN USING THIS TOOL/MACHINE MUST BE EXPLAINED BY THE CUSTOMER TO ALL OPERATORS.

(!) ALWAYS DISCONNECT THE AIRLINE FROM THE TOOL/MACHINE INLET BEFORE ATTEMPTING TO ADJUST, FIT OR REMOVE A NOSE ASSEMBLY.

(!) DO NOT OPERATE A TOOL/MACHINE THAT IS DIRECTED TOWARDS ANY PERSON(S).

(!) ALWAYS ADOPT A FIRM FOOTING OR A STABLE POSITION BEFORE OPERATING THE TOOL/MACHINE.

(!) ENSURE THAT VENT HOLES DO NOT BECOME BLOCKED OR COVERED AND THAT HOSES ARE ALWAYS IN GOOD CONDITION.

(!) THE COMBINATION OF FASTENER, MANDREL, HOLE SIZE AND SHEET THICKNESS SHALL BE IN ACCORDANCE WITH AVDEL SPECIFICATIONS.

In addition to the general safety rules opposite, the following specific safety points must also be observed:

IMPORTANT

WHILE A SMALL AMOUNT OF WEAR AND MARKING WILL NATURALLY OCCUR THROUGH NORMAL AND CORRECT USE OF MANDRELS, THEY MUST BE REGULARLY EXAMINED FOR EXCESSIVE WEAR AND MARKING, WITH PARTICULAR ATTENTION TO THE HEAD DIAMETER, THE TAIL JAW GRIPPING AREA OF THE SHANK OR HEAVY PITTING OF THE SHANK AND ANY MANDREL DISTORTION. MANDRELS WHICH FAIL DURING USE COULD FORCIBLY EXIT THE TOOL. IT IS THE CUSTOMER'S RESPONSIBILITY TO ENSURE THAT MANDRELS ARE REPLACED BEFORE ANY EXCESSIVE LEVELS OF WEAR AND ALWAYS BEFORE THE MAXIMUM RECOMMENDED NUMBER OF PLACINGS. CONTACT YOUR AVDEL REPRESENTATIVE WHO WILL LET YOU KNOW WHAT THAT FIGURE IS BY MEASURING THE BROACH LOAD OF YOUR APPLICATION WITH OUR CALIBRATED MEASURING TOOL. THESE TOOLS CAN ALSO BE PURCHASED UNDER PART NUMBER 07900-09080, SUPPLIED WITH ALL NECESSARY INFORMATION FOR TESTING.

(!) WHEN USING THE TOOL, THE WEARING OF SAFETY GLASSES IS REQUIRED BOTH BY THE OPERATOR AND OTHERS IN THE VICINITY TO PROTECT AGAINST FASTENER EJECTION, SHOULD A FASTENER BE PLACED 'IN AIR'. WE RECOMMEND WEARING GLOVES IF THERE ARE SHARP EDGES OR CORNERS ON THE APPLICATION.

(!) THE OPERATING PRESSURE SHALL NOT EXCEED 8 BAR - 120 LBF/IN^2.

(!) BENCH MOUNTED TOOLS MUST NOT BE USED WITHOUT AN AVDEL GUARD AND WITH THE SHIELD IN POSITION ABOVE THE TOOL BARREL AND THEY SHOULD NOT BE OPERATED IF THE GUARD IS DAMAGED IN ANY WAY.

(!) DO NOT OPERATE THE TOOL WITHOUT FULL NOSE EQUIPMENT IN PLACE.

(!) DO NOT CONTAMINATE THE TRANSPARENT SHIELD WITH SOLVENTS OR ALKALINE SUBSTANCES. THESE WILL REDUCE THE STRENGTH OF THE SHIELD.

(!) TAKE CARE TO AVOID ENTANGLEMENT OF LOOSE CLOTHES, TIES, LONG HAIR, CLEANING RAGS ETC. IN THE MOVING PARTS OF THE TOOL WHICH SHOULD BE KEPT DRY AND CLEAN FOR BEST POSSIBLE GRIP.

(!) THE CYLINDER OF THE TOOL MUST BE FREE TO MOVE WITHOUT RISK OF HITTING OR TRAPPING THE OPERATOR OR OTHER PERSONS.

(!) WHEN CARRYING THE TOOL FROM PLACE TO PLACE KEEP HANDS AWAY FROM THE TRIGGER/LEVER TO AVOID INADVERTENT START UP.

NTENT OF USE

The pneumatic 0727 type tool is designed to place Avdel repetition fasteners (except $^{1}/_{16}$" Avlug) making it ideal for batch or flow-line assembly in a wide variety of applications throughout all industries.

Both models: the 07271 and 07274 are hand-held and can be suspended vertically through a ring at the rear of the tool.

Both models will place most repetition fasteners, as shown on the tables below.

Both models make use of the same nose equipment. Reference must be made to the Nose Equipment section of the manual when selecting compatible components for the type and size of fastener used in your application (see pages 15 to 20). Nose jaw dimensions are shown on page 12 and stated on pages 13 and 14.

FASTENER NAME	FASTENER SIZE									
	07271					07274				
	$^{3}/_{32}$"	$^{1}/_{8}$"	$^{5}/_{32}$"	$^{3}/_{16}$"	$^{1}/_{4}$"	$^{3}/_{32}$"	$^{1}/_{8}$"	$^{5}/_{32}$"	$^{3}/_{16}$"	$^{1}/_{4}$"
CHOBERT	●	●	●	●	●	●	●	●	●	
GROVIT	●	●	●	●		●	●	●	●	
AVLUG	●	●				●	●			
BRIV	●	●	●	●		●	●	●		

FASTENER NAME	FASTENER SIZE											
	07271						07274					
	2.5mm 2.8mm	3mm	3.5mm	4mm UNC	M2.5 4-40 UNC	M3 6-32	2.5mm 2.8mm	3mm	3.5mm	4mm	M2.5 4-40 UNC	M3 6-32 UNC
RIVSCREW		●	●	●				●	●	●		
AVTRONIC	●						●					
AVSERT					●	●					●	●

07271 AND 07274 MODELS

These are hand held models which can be suspended vertically from a ring mounted at the rear of the tool. While the 07274 is less powerful with only two pistons, (see differences on the general assembly, page 25), it gives greater access with its longer barrel protusion. When choosing one of these hand held tools refer to the tool capability tables opposite.

The nose jaw dimensions are shown on page 12 and in the nose jaw selection tables, pages 13 and 14.

07271 MODEL

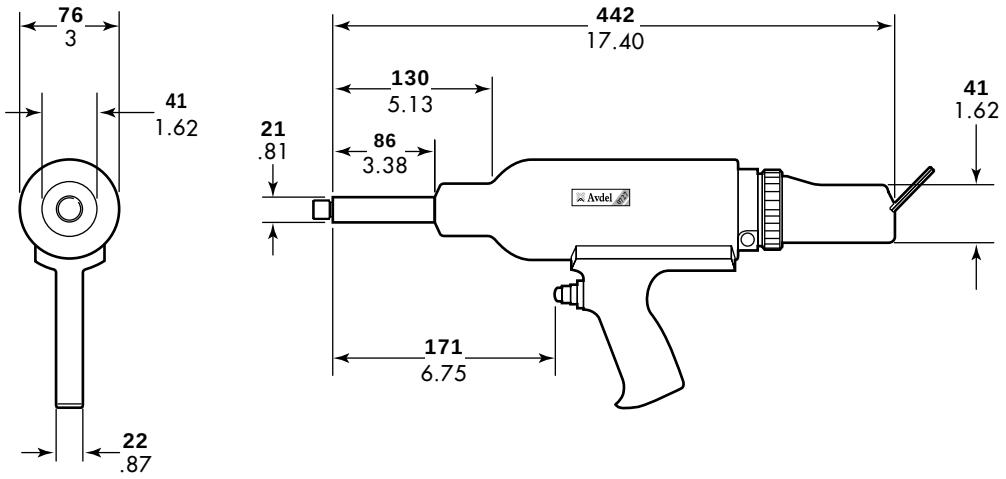

Dimensions shown in bold are millimetres. Other dimensions are in inches.

07274 MODEL

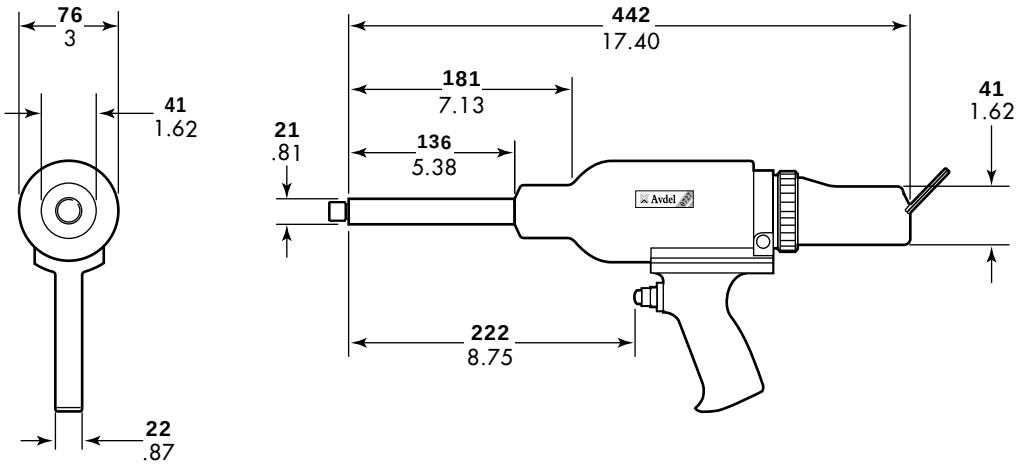

Dimensions shown in bold are millimetres. Other dimensions are in inches.

AIR SUPPLY

07271 AND 07274 MODELS

All tools are operated with compressed air at an optimum pressure of 5.5 bar. We recommend the use of pressure regulators and automatic oiling/filtering systems on the main air supply. To ensure maximum tool life and minimum tool maintenance, these should be fitted within 3 metres of the air inlet point on the tool itself for the 07271 and 07274 models, see diagram below.

Air supply hoses should have a minimum working effective pressure rating of 150% of the maximum pressure produced in the system or 10 bar, whichever is the highest. Air hoses should be oil resistant, have an abrasion resistant exterior and should be armoured where operating conditions may result in hoses being damaged. All air supply hoses MUST have a minimum bore diameter of 6.4 millimetres or $^{1}/_{4}$ inch.

Read servicing daily details on page 21.

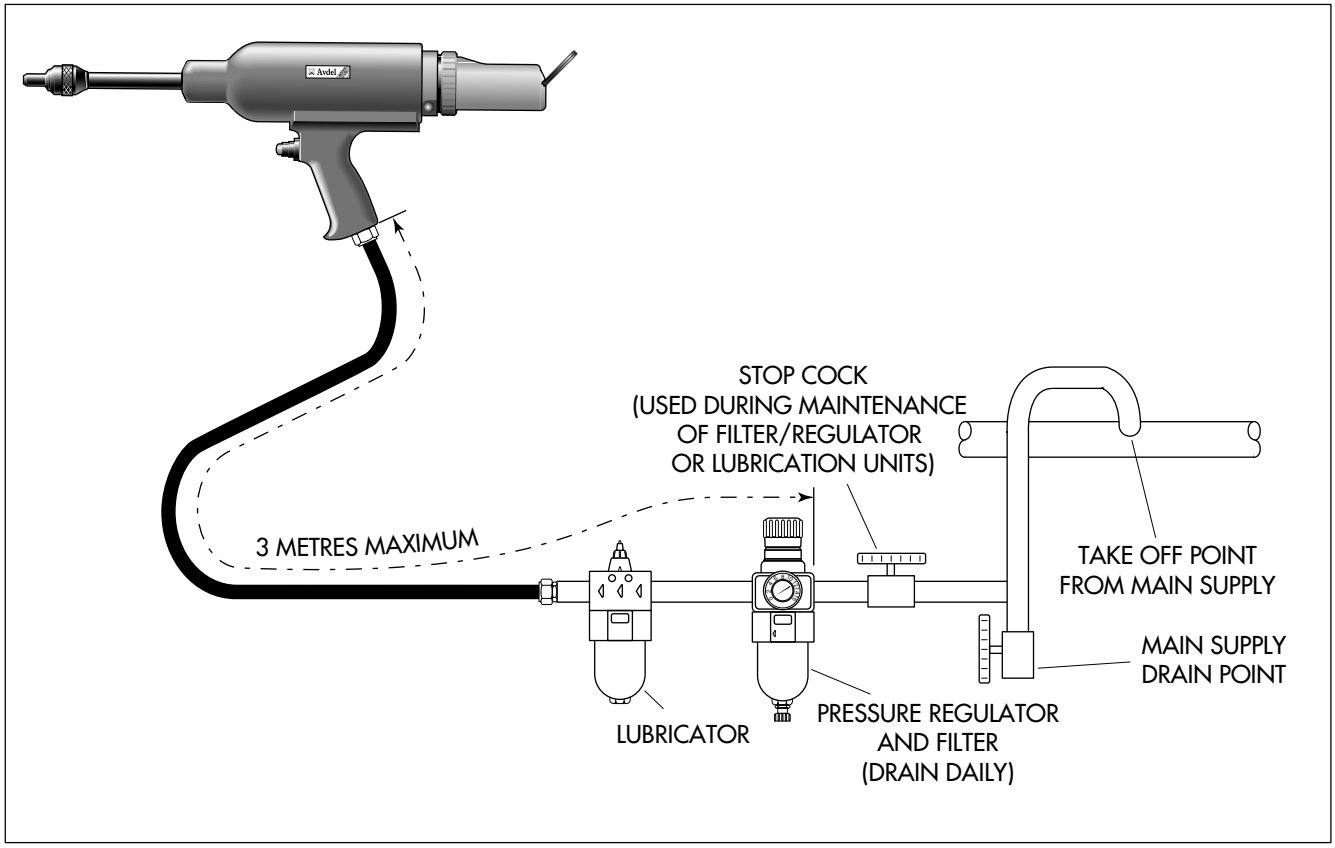

BUSH STOPS

IMPORTANT

Bush stops are fitted to reduce the stroke length of the tool thus the tool cycle time and shock loads. Minimising shock loads will increase the efficiency of the tool and will prolong the life of the mandrel.

Each tool is supplied with three bush stops already fitted. It may be necessary to remove one or more of these to match the length of the fasteners to be placed so that when in the fully back position, the mandrel head lies just inside the nose jaws.

Use the table below to ascertain the number of bush stops recommended for your fastener. First find the relevant diameter and within that section select the correct length code. These two digits are the last two of the fastener part number. Read the corresponding number of bush stops in the line below.

FASTENER DIAMETER	3/32", 2.5mm and 2.8mm										1/8"					
FASTENER LENGTH CODE	04	06	08	10	12	14	16	18	20	22	04	06	08	10	12	14
NUMBER OF FULL BUSH STOPS	**3**	**3**	**2**	**2**	**1**	**0**	**0**	**0**	**0**	**0**	**3**	**2**	**2**	**2**	**1**	**1**

FASTENER DIAMETER	5/32"						3/16"						1/4"			
FASTENER LENGTH CODE	05/06	07/08	09/10	11/12	13/14	15/16	07	09	11	13	15	17	09	11	13	15
NUMBER OF FULL BUSH STOPS	**3**	**3**	**3**	**1**	**1**	**0**	**3**	**2**	**1**	**1**	**0**	**0**	**2**	**1**	**0**	**0**

For extra bush stops, 1/8" thick, order part number 07170-00201. If a finer setting is required, 1/16" bush stops can be ordered, part number 07170-00204.

ADJUSTING THE NUMBER OF BUSH STOPS:

Item **numbers in bold** refer to the general assembly and parts list on pages 25 and 26.

- Ensure that the air supply to the tool is disconnected.
- Using the lock ring key supplied with the tool, unscrew lock ring **20** to remove the tail jaw assembly.
- Bush stops **12** are fitted onto barrel **59** forward of barrel nut **23**. Remove or add as required.
- Reassemble.
- Before checking that the mandrel head retracts to the correct position after a fastener has been placed, you will need to check the cursor orientation and load the tool with fasteners.

CURSOR

IMPORTANT

If fitted incorrectly, the cursor will not allow feeding of the fasteners.

While the cursor will be fitted the correct way round when the tool is supplied, we recommend that you check its orientation before fitting the nose equipment. The sprung loaded, slightly concave, end of the cursor should point towards the front of the tool as shown in the illustration below.

When fitted the correct way round, the cursor will easily slide out of the barrel when a mandrel is pushed into its centre then pulled back.

To reverse the orientation of the cursor, follow these steps:

Item **numbers in bold** refer to the general assembly and parts list on pages 25 and 26.

- Remove tail jaw assembly **1**.
- Pull out mandrel guide **17**.
- Insert a mandrel pointed end first through the rear end of barrel **59** and push until the mandrel starts appearing at the front of barrel **59**.
- Pull the mandrel from the front until the cursor falls out.
- Remove the mandrel and replace the cursor, correct way round.
- Replace mandrel guide **17** and tail jaw assembly **1**.

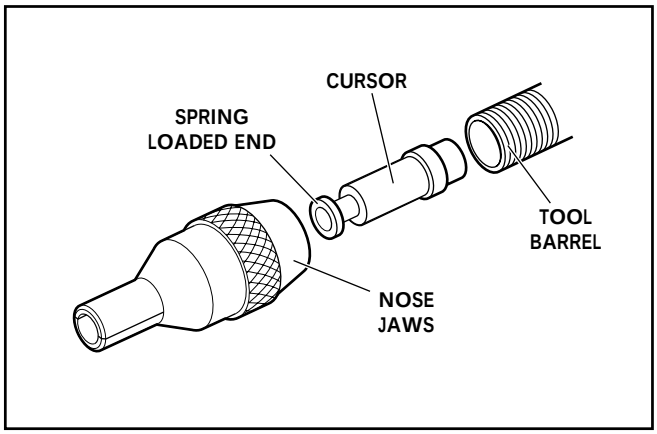

LOADING THE TOOL

IMPORTANT

The procedure for loading the tool and for fitting the nose equipment to the tool are integral.

When ordering a complete tool or system you will normally be supplied with all the nose equipment required for the fastener to be placed. To identify nose equipment components or to select the correct elements, read the nose equipment section, on pages 11 to 14.

If you have been supplied with a nose jaw, mandrels and mandrel follower springs proceed with loading the tool and fitting the nose equipment as follows:
Item **numbers in bold** refer to the general assembly and parts list on pages 25 and 26.

- Connect the air supply to the tool or system.
- Open tail jaws **9** which grip the mandrel, by switching off the tail jaw switch on the hand tools or the pantograph system, (items **53**/**54** on the 07271 and 07274).
- Screw selected nose jaws onto barrel **59** of the tool.
- Insert a mandrel into the tail end of the fasteners through the paper pod.
- Slide the mandrel follower spring onto the mandrel ENSURING correct orientation, as shown in the table page 9.
- Gripping the tail end of the mandrel, tear off the paper pod from around the fasteners.
- Open the nose jaws either by rotating the outer ring on Cam operated nose jaws or by pushing outwards on the jaw ends, as illustrated top left on page 10.
- Insert the previously assembled mandrel, mandrel follower spring and fasteners into the nose jaws until the first fastener to be placed is protuding from the nose jaw.
- Close the nose jaws and adjust so that the first fastener protrudes by 1.5mm to 3mm ($^1/_{16}$" to $^1/_8$"), as shown in the illustration top right on page 10.
- Close the tail jaws to ensure the mandrel is gripped.

MANDREL FOLLOWER SPRINGS IDENTIFICATION AND ORIENTATION

FASTENER NAME	FASTENER SIZE	NOSE JAW (SEE NOSE EQUIPMENT SECTION)	MANDREL SIZE	MANDREL/MANDREL FOLLOWER SPRING AND FASTENER ASSEMBLY
BRIV	3/32"	STANDARD TAPERED	ALL	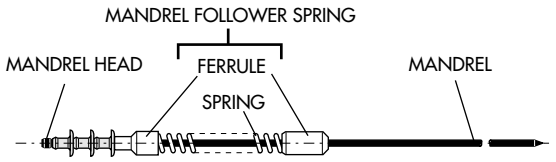
	3/32"	LIMITED ACCESS & LIMITED ACCESS CAM OPERATED	ALL	
	1/8"	ALL	ALL	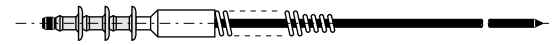
	5/32"	ALL	ALL	
	3/16"	ALL	ALL	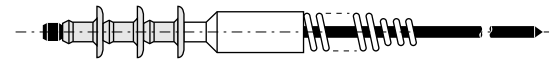
CHOBERT AVLUG GROVIT	3/32"	ALL EXCEPT STANDARD TAPERED, LIMITED ACCESS	ALL	
	3/32"	STANDARD TAPERED, LIMITED ACCESS	ALL	
	1/8"	ALL	ALL	
CHOBERT GROVIT	5/32"	ALL	ALL EXCEPT 3rd OVERSIZE	
	5/32"	ALL	3rd OVERSIZE	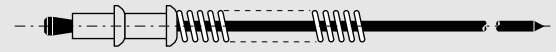
	3/16"	ALL	ALL EXCEPT 2nd OVERSIZE	
	3/16"	ALL	2nd OVERSIZE	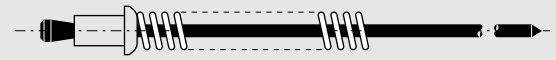
CHOBERT	1/4"	ALL	ALL	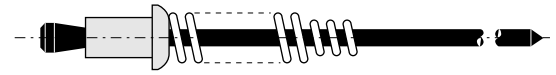
RIVSCREW	3mm 3.5mm 4mm	ALL	ALL	
AVSERT	2.5mm 4 x 40 UNC	ALL	ALL	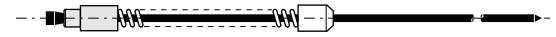
	3mm 6 x 32 UNC	ALL	ALL	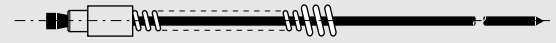
AVTRONIC	2.5mm	ALL	ALL	
	2.8mm	ALL EXCEPT LIMITED ACCESS	ALL	
	2.8mm	LIMITED ACCESS	ALL	

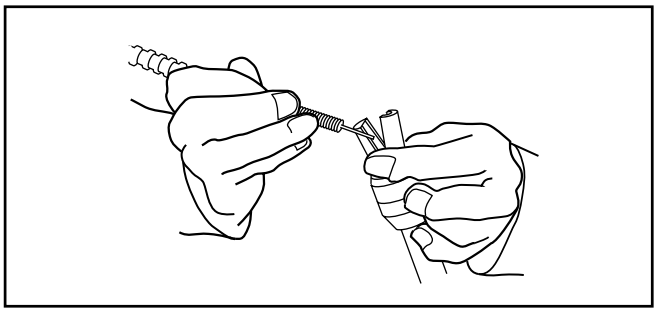

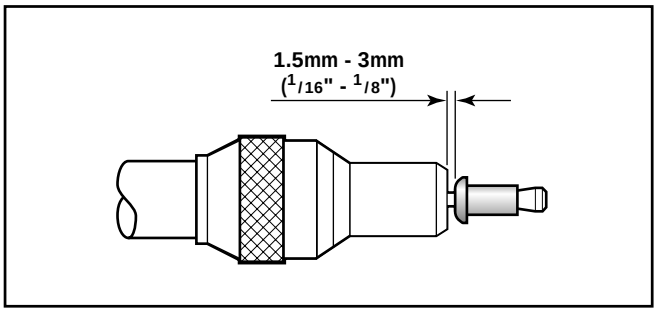

RELOADING THE TOOL

- Open tail jaws **9** of tool.
- Open the nose jaws and pull the empty mandrel and mandrel follower spring out of the tool.
- Reload the tool by following the above instructions, starting at stage ■.

OPERATING PROCEDURE

IMPORTANT

It is essential to check that the number of bush stops, the cursor orientation and the nose equipment are correct before attempting to operate the tool.

07271 AND 07274 MODELS

- Connect the air supply.
- Push the fastener which protrudes from the nose jaws, fully into the application hole ensuring that the tool is held square.
- Operate the trigger WITHOUT releasing; the fastener is pushed over the mandrel head and formed into the application.
- Remove the tool.
- Release the trigger. The next fastener will automatically be presented through the nose jaws, ready for placing.

ACCESSORIES

This accessory is designed to be fitted to the 07271 and 07274 tools only when placing Avserts. It enables the application to be held square to the Avsert during the placing sequence. Fit as follows:

- Remove the nose jaws, if fitted.
- Slide the inner collar over the barrel until the barrel sits on the shoulder inside the collar.
- Screw the nose jaws onto the barrel to retain the inner collar.
- Slide the outer body of the attachment over the inner collar and rotate to ensure that the pin on the inner collar locates in the bayonet slot on the outer body.

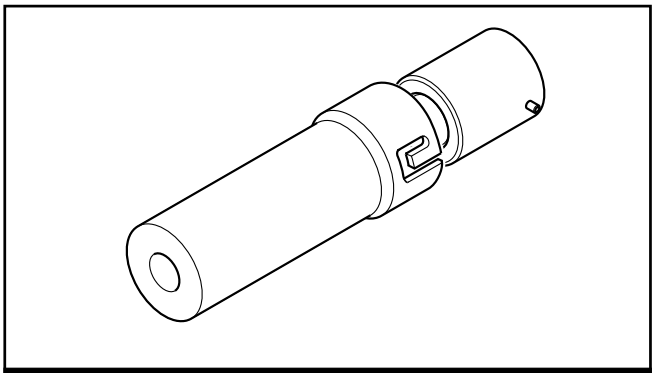

Squaring-up Attachment - part nº 07271-08500

NOSE EQUIPMENT

On speed riveting tools such as the 0727 type, the nose equipment always consists of three elements; a nose jaw, a mandrel and a follower spring. All three items are matched to the fastener being placed and to the hole size in the application.

IMPORTANT

To avoid complete dismantling of the tool it is essential to check the orientation of the cursor before fitting the nose equipment to the tool. See 'CURSOR' section on page 7.

It is essential that the correct nose equipment is fitted to the tool to ensure both effective placing of the fastener and SAFE operation of the tool. READ THE SAFETY INSTRUCTIONS pages 2 and 3 carefully.

To identify the correct combination of nose equipment to fit your tool first select a nose jaw by reading the section below then read the mandrel section to select part numbers both for the mandrel itself and for the mandrel follower spring. Mandrels and mandrel follower springs are illustrated on page 9.

To fit the nose equipment, follow the 'Loading the tool' procedure on page 8.

NOSE JAWS

IMPORTANT

The wrong nose jaw could result in an incorrectly placed fastener or unsatisfactory clench.

Nose Jaws can be categorised into seven different basic shapes as drawn opposite, even though internal dimensions will vary according to the fastener it is intended for. Exact dimensions referring to the letters in the illustrations opposite are indicated in the 'NOSE JAW SELECTION TABLES' over the next two pages.

For a particular shape, there may be several options of end form giving access benefits or fastener placing enhancement.

FLAT

- Normal end form of all nose jaws.
- Suitable on all applications with no access restrictions.

UNIVERSAL

- Designed for use with universal head Chobert fasteners.
- Can also be used with Briv fasteners to obtain the highest possible clench. Note this reduces the maximum grip range of the Briv fastener by approximately 0.015" (0.4mm).

RECESSED

- For use with Briv fasteners ONLY.
- It gives a higher clench than a flat end form but less than a universal end form, with no reduction of the grip range of the fastener.

TAPERED

- Available as shown in the 'Nose Jaw Selection Tables'.
- Allows greater accessability than a flat end form and places the same range.

HEAD FORMING

- For use with Rivscrew fasteners ONLY.
- Deforms the heads of the fasteners to achieve good clench.

SELECTING A NOSE JAW

- List the name, size and material of the fastener to be placed.
- Look for this fastener in the first column of the nose jaw selection tables on page 13 if using imperial measurements and on page 14 if using metric units.
- Looking right across the table, take note of which nose jaws are available. ONLY those shown are available.
- Select which is most suitable for your application by referring to the respective nose jaw drawing. If your application has no access restriction, you should select the standard shape with a flat end form with or without a cam.

STANDARD

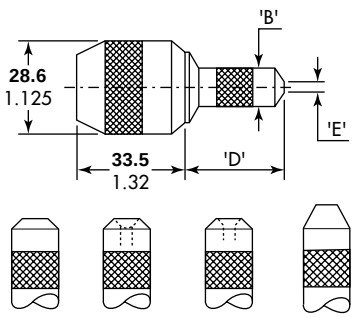

FLAT UNIVERSAL RECESSED TAPERED

Available in four different end forms to place all fasteners (except Rivscrew). Suitable on applications with no or little access restriction.

LONG

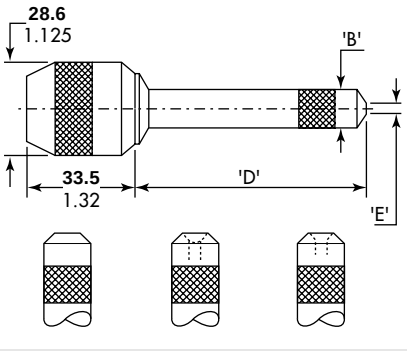

FLAT UNIVERSAL RECESSED

Available to place most of the fasteners. Allows more penetration into applications with no other access restriction.

LONG CURVED

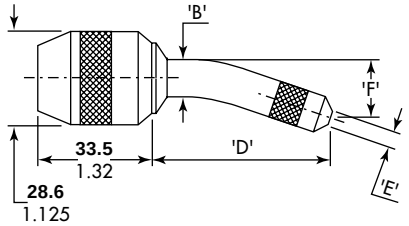

RIVET Ø	'F' mm	'F' in.
1/8	.620	15.7
5/32	.690	17.5
3/16	.720	18.3

FLAT RECESSED

Available as shown in NOSE JAW SELECTION TABLE.
Allows more penetration into applications with restricted access.
Mandrels must be curved by hand to follow the shape of the jaw.

LIMITED ACCESS

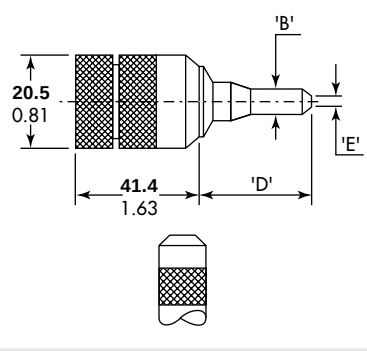

FLAT

Available as shown in NOSE JAW SELECTION TABLE.
Allows access into very restrictive applications.

STANDARD CAM OPERATED

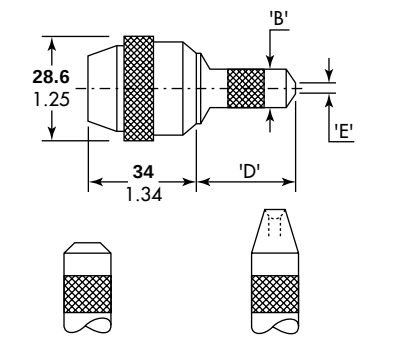

FLAT HEAD FORMING (HF)

LONG CAM OPERATED

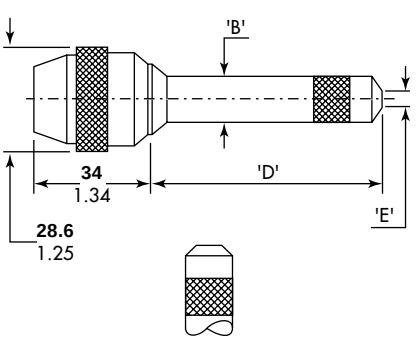

FLAT

LIMITED ACCESS CAM OPERATED

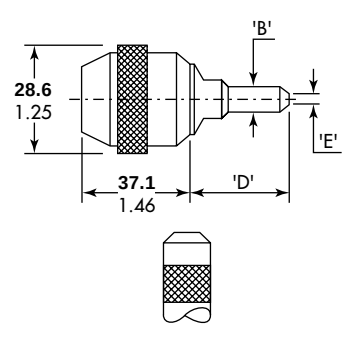

FLAT

Available as shown in NOSE JAW SELECTION TABLE overleaf. Equivalent functions to the Standard, Long and Limited Access above with the addition of a cam to ease and speed up the nose jaw opening thus the pod reloading procedure.

NOSE JAW SELECTION

IMPERIAL

The 'REF Nº' column cross references with the 'REF Nº' columns in the mandrel section. It identifies both the mandrel and mandrel follower spring required for a particular nose jaw with a specific fastener.

FASTENER	REF. Nº	NOSE JAW					REF. Nº	NOSE JAW				
		TYPE AND END FORM	PART Nº	DIMENSIONS				TYPE AND END FORM	PART Nº	DIMENSIONS		
				'B'	'D'	'E'				'B'	'D'	'E'
3/32" CHOBERT & GROVIT	1	STANDARD - FLAT	07150-03003	.36	1.30	.16	1	# STANDARD - UNIVERSAL	07150-03203	.36	1.33	.24
	1	STD. CAM OPERATED - FLAT	07170-04500	.36	1.30	.16	1	LTD. ACCESS CAM OPERATED	07177-03003	.20	1.18	.16
	2	STANDARD - TAPERED	07170-03103	.36	1.30	.16	3	LIMITED ACCESS	07274-01000	.22	1.07	.16
	4	LONG - FLAT	07150-04003	.41	2.30	.16	4	LONG CURVED - FLAT	07150-05003	.41	2.28	.16
1/8" CHOBERT & GROVIT	5	STANDARD - FLAT	07150-03004	.41	1.18	.20	5	# STANDARD - UNIVERSAL	07150-03204	.41	1.22	.32
	5	STANDARD - TAPERED	07170-03104	.41	1.19	.20	5	STD. CAM OPERATED - FLAT	07170-04600	.41	1.18	.20
	6	LONG - FLAT	07150-04004	.41	2.18	.20	6	# LONG - UNIVERSAL	07150-04204	.41	2.22	.30
	6	LONG CURVED - FLAT	07150-05004	.41	2.12	.20	6	LONG CAM OPERATED - FLAT	07170-05000	.41	2.18	.20
5/32" CHOBERT & GROVIT	7	STANDARD - FLAT	07150-03005	.48	1.30	.24	7	# STANDARD - UNIVERSAL	07150-03205	.48	1.35	.41
	7	STANDARD - TAPERED	07150-03105	.44	1.30	.24	7	STD. CAM OPERATED - FLAT	07170-04700	.48	1.30	.24
	8	LONG - FLAT	07150-04005	.48	2.30	.24	8	# LONG - UNIVERSAL	07150-04205	.48	2.35	.42
	8	LONG CURVED - FLAT	07150-05005	.48	2.23	.24	8	LONG CAM OPERATED - FLAT	07170-05100	.48	2.30	.24
3/16" CHOBERT & GROVIT	9	STANDARD - FLAT	07150-03006	.56	1.18	.33	9	# STANDARD - UNIVERSAL	07150-03206	.56	1.24	.47
	9	STANDARD - TAPERED	07150-03106	.56	1.18	.33	9	STD. CAM OPERATED - FLAT	07170-04800	.56	1.18	.33
	10	LONG - FLAT	07150-04006	.56	2.30	.33	10	# LONG - UNIVERSAL	07150-04206	.56	2.39	.48
	10	LONG CURVED - FLAT	07150-05006	.56	2.21	.33	10	LONG CAM OPERATED - FLAT	07170-05200	.56	2.30	.33
1/4" CHOBERT	11	STANDARD - FLAT	07150-03008	.64	1.18	.39	11	STD. CAM OPERATED - FLAT	07170-04900	.64	1.18	.39
	12	LONG - FLAT	07150-04008	.64	2.18	.39	12	LONG CAM OPERATED - FLAT	07170-05300	.64	2.18	.39
3/32" BRIV Brass only	13	STANDARD - TAPERED	07170-03103	.36	1.30	.15	14	LTD. ACCESS CAM OPERATED	07177-03003	.20	1.18	.16
	14	LIMITED ACCESS	07274-01000	.22	1.07	.16	-	-	-	-	-	-
1/8" BRIV Al. Alloy, Brass, Steel	15	STANDARD - FLAT	07150-03004	.41	1.18	.20	15	STANDARD - RECESSED	07170-03004	.41	1.20	.30
	15	STANDARD - TAPERED	07170-03104	.41	1.19	.20	16	LONG - FLAT	07150-04004	.41	2.18	.20
	16	LONG - RECESSED	07170-03204	.41	2.18	.30	16	LONG CURVED - FLAT	07150-05004	.41	2.12	.20
	16	LONG CURVED - RECESSED	07170-03304	.41	2.12	.30	-	-	-	-	-	-
5/32" BRIV Al. Alloy, Brass, Steel	17	STANDARD - FLAT	07150-03005	.48	1.30	.24	17	STANDARD - RECESSED	07170-03005	.48	1.32	.41
	18	LONG - FLAT	07150-04005	.48	2.30	.24	18	LONG - RECESSED	07170-03205	.48	2.30	.41
	18	LONG CURVED - FLAT	07150-05005	.48	2.23	.24	18	LONG CURVED - RECESSED	07170-03305	.48	2.23	.41
5/32" BRIV St.Steel only	19	STANDARD - FLAT	07150-03005	.48	1.30	.24	19	STANDARD - RECESSED	07170-03005	.48	1.32	.41
	20	LONG - FLAT	07150-04005	.48	2.30	.24	20	LONG - RECESSED	07170-03205	.48	2.30	.41
	20	LONG CURVED - FLAT	07150-05005	.48	2.23	.24	20	LONG CURVED - RECESSED	07170-03305	.48	2.23	.41
3/16" BRIV Al. Alloy, Brass, Steel	21	STANDARD - FLAT	07150-03006	.56	1.18	.33	21	STANDARD - RECESSED	07170-03006	.56	1.20	.47
	22	LONG - FLAT	07150-04006	.56	2.30	.33	22	LONG - RECESSED	07170-03206	.56	2.30	.47
	22	LONG CURVED - FLAT	07150-05006	.56	2.21	.33	22	LONG CURVED - RECESSED	07170-03306	.56	2.21	.47
3/16" BRIV St.Steel only	23	STANDARD - FLAT	07150-03006	.56	1.18	.33	23	STANDARD - RECESSED	07170-03006	.56	1.20	.47
	24	LONG - FLAT	07150-04006	.56	2.30	.33	24	LONG - RECESSED	07170-03206	.56	2.30	.47
	24	LONG CURVED - FLAT	07150-05006	.56	2.21	.33	24	LONG CURVED - RECESSED	07170-03306	.56	2.21	.47
3/32" AVLUG	25	STANDARD - FLAT	07150-03003	.36	1.30	.16	25	STANDARD - TAPERED	07150-03103	.36	1.30	.16
	25	STD. CAM OPERATED - FLAT	07170-04500	.36	1.30	.16	26	LONG - FLAT	07150-04003	.41	2.30	.16
	26	LONG CURVED - FLAT	07150-05003	.41	2.28	.16	-	-	-	-	-	-
1/8" AVLUG	27	STANDARD - FLAT	07150-03004	.41	1.18	.20	27	STANDARD - TAPERED	07170-03104	.41	1.19	.20
	27	STD. CAM OPERATED - FLAT	07170-04600	.41	1.18	.20	28	LONG - FLAT	07150-04004	.41	2.18	.20
	28	LONG CURVED - FLAT	07150-05004	.41	2.12	.20	28	LONG CAM OPERATED - FLAT	07170-05000	.41	2.18	.20
2.5mm, 4-40 UNC AVSERT	29	STANDARD - FLAT	07150-03003	.36	1.30	.16	-	-	-	-	-	-
3.0mm, 6-32 UNC AVSERT	30	STANDARD - FLAT	07150-03004	.41	1.18	.20	30	STD. CAM OPERATED - FLAT	07170-04600	.41	1.18	.20
2.5mm AVTRONIC	31	STANDARD - FLAT	07150-03003	.36	1.30	.16	31	LTD. ACCESS CAM OPERATED	07271-08000	.41	1.18	.16
	32	LONG - FLAT	07150-04003	.41	2.30	.16	-	-	-	-	-	-
2.8mm AVTRONIC	33	STANDARD - FLAT	07271-05600	.36	1.30	.16	34	LTD. ACCESS CAM OPERATED	07271-08100	.40	1.18	.16
	35	LONG - FLAT	07271-05900	.41	2.30	.16	-	-	-	-	-	-
3.0mm RIVSCREW	36	STD. CAM OPERATED - HF	07271-03000	.41	1.18	.24	-	-	-	-	-	-
3.5mm RIVSCREW	37	STD. CAM OPERATED - HF	07271-03500	.41	1.18	.24	-	-	-	-	-	-
4.0mm RIVSCREW	38	STD. CAM OPERATED - HF	07271-04000	.41	1.18	.25	-	-	-	-	-	-

These nose jaws are suitable for placing Chobert rivets with a Universal Head Form. When used on the equivalent size of Briv, the highest possible clench is achieved. Note that when using Briv fasteners, the maximum grip is reduced by approximately 0.015" (0.4 mm).

NOSE JAW SELECTION

METRIC

FASTENER	REF. N°	NOSE JAW					REF. N°	NOSE JAW				
		TYPE AND END FORM	PART N°	DIMENSIONS				TYPE AND END FORM	PART N°	DIMENSIONS		
				'B'	'D'	'E'				'B'	'D'	'E'
3/32" CHOBERT & GROVIT	1	STANDARD - FLAT	07150-03003	9.14	33.02	4.06	1	# STANDARD - UNIVERSAL	07150-03203	9.14	33.78	6.10
	1	STD. CAM OPERATED - FLAT	07170-04500	9.14	33.02	4.06	1	LTD. ACCESS CAM OPERATED	07177-03003	5.08	29.97	4.06
	2	STANDARD - TAPERED	07170-03103	9.14	33.02	4.06	3	LIMITED ACCESS	07274-01000	5.59	27.18	4.06
	4	LONG - FLAT	07150-04003	10.41	58.42	4.06	4	LONG CURVED - FLAT	07150-05003	10.41	57.91	4.06
1/8" CHOBERT & GROVIT	5	STANDARD - FLAT	07150-03004	10.41	29.97	5.08	5	# STANDARD - UNIVERSAL	07150-03204	10.41	30.99	8.13
	5	STANDARD - TAPERED	07170-03104	10.41	30.23	5.08	5	STD. CAM OPERATED - FLAT	07170-04600	10.41	29.97	5.08
	6	LONG - FLAT	07150-04004	10.41	55.37	5.08	6	# LONG - UNIVERSAL	07150-04204	10.41	56.39	7.62
	6	LONG CURVED - FLAT	07150-05004	10.41	53.85	5.08	6	LONG CAM OPERATED - FLAT	07170-05000	10.41	55.37	5.08
5/32" CHOBERT & GROVIT	7	STANDARD - FLAT	07150-03005	12.19	33.02	6.10	7	# STANDARD - UNIVERSAL	07150-03205	12.19	34.29	10.41
	7	STANDARD - TAPERED	07150-03105	11.18	33.02	6.10	7	STD. CAM OPERATED - FLAT	07170-04700	12.19	33.02	6.10
	8	LONG - FLAT	07150-04005	12.19	58.42	6.10	8	# LONG - UNIVERSAL	07150-04205	12.19	59.69	10.67
	8	LONG CURVED - FLAT	07150-05005	12.19	56.64	6.10	8	LONG CAM OPERATED - FLAT	07170-05100	12.19	58.42	6.10
3/16" CHOBERT & GROVIT	9	STANDARD - FLAT	07150-03006	14.22	29.97	8.38	9	# STANDARD - UNIVERSAL	07150-03206	14.22	31.50	11.94
	9	STANDARD - TAPERED	07150-03106	14.22	29.97	8.38	9	STD. CAM OPERATED - FLAT	07170-04800	14.22	29.97	8.38
	10	LONG - FLAT	07150-04006	14.22	58.42	8.38	10	# LONG - UNIVERSAL	07150-04206	14.22	60.71	12.19
	10	LONG CURVED - FLAT	07150-05006	14.22	56.13	8.38	10	LONG CAM OPERATED - FLAT	07170-05200	14.22	58.42	8.38
1/4" CHOBERT	11	STANDARD - FLAT	07150-03008	16.26	29.97	9.91	11	STD. CAM OPERATED - FLAT	07170-04900	16.26	29.97	9.91
	12	LONG - FLAT	07150-04008	16.26	55.37	9.91	12	LONG CAM OPERATED - FLAT	07170-05300	16.26	55.37	9.91
3/32" BRIV Brass only	13	STANDARD - TAPERED	07170-03103	9.14	33.02	3.81	14	LTD. ACCESS CAM OPERATED	07177-03003	5.08	29.97	4.06
	14	LIMITED ACCESS	07274-01000	5.59	27.18	4.06	-	-	-	-	-	-
1/8" BRIV Al. Alloy, Brass, Steel	15	STANDARD - FLAT	07150-03004	10.41	29.97	5.08	15	STANDARD - RECESSED	07170-03004	10.41	30.48	7.62
	15	STANDARD - TAPERED	07170-03104	10.41	30.23	5.08	16	LONG - FLAT	07150-04004	10.41	55.37	5.08
	16	LONG - RECESSED	07170-03204	10.41	55.37	7.62	16	LONG CURVED - FLAT	07150-05004	10.41	53.85	5.08
	16	LONG CURVED - RECESSED	07170-03304	10.41	53.85	7.62	-	-	-	-	-	-
5/32" BRIV Al. Alloy, Brass, Steel	17	STANDARD - FLAT	07150-03005	12.19	33.02	6.10	17	STANDARD - RECESSED	07170-03005	12.19	33.53	10.41
	18	LONG - FLAT	07150-04005	12.19	58.42	6.10	18	LONG - RECESSED	07170-03205	12.19	58.42	10.41
	18	LONG CURVED - FLAT	07150-05005	12.19	56.64	6.10	18	LONG CURVED - RECESSED	07170-03305	12.19	56.64	10.41
5/32" BRIV St.Steel only	19	STANDARD - FLAT	07150-03005	12.19	33.02	6.10	19	STANDARD - RECESSED	07170-03005	12.19	33.53	10.41
	20	LONG - FLAT	07150-04005	12.19	58.42	6.10	20	LONG - RECESSED	07170-03205	12.19	58.42	10.41
	20	LONG CURVED - FLAT	07150-05005	12.19	56.64	6.10	20	LONG CURVED - RECESSED	07170-03305	12.19	56.64	10.41
3/16" BRIV Al. Alloy, Brass, Steel	21	STANDARD - FLAT	07150-03006	14.22	29.97	8.38	21	STANDARD - RECESSED	07170-03006	14.22	30.48	11.94
	22	LONG - FLAT	07150-04006	14.22	58.42	8.38	22	LONG - RECESSED	07170-03206	14.22	58.42	11.94
	22	LONG CURVED - FLAT	07150-05006	14.22	56.13	8.38	22	LONG CURVED - RECESSED	07170-03306	14.22	56.13	11.94
3/16" BRIV St.Steel only	23	STANDARD - FLAT	07150-03006	14.22	29.97	8.38	23	STANDARD - RECESSED	07170-03006	14.22	30.48	11.94
	24	LONG - FLAT	07150-04006	14.22	58.42	8.38	24	LONG - RECESSED	07170-03206	14.22	58.42	11.94
	24	LONG CURVED - FLAT	07150-05006	14.22	56.13	8.38	24	LONG CURVED - RECESSED	07170-03306	14.22	56.13	11.94
3/32" AVLUG	25	STANDARD - FLAT	07150-03003	9.14	33.02	4.06	25	STANDARD - TAPERED	07150-03103	9.14	33.02	4.06
	25	STD. CAM OPERATED - FLAT	07170-04500	9.14	33.02	4.06	26	LONG - FLAT	07150-04003	10.41	58.42	4.06
	26	LONG CURVED - FLAT	07150-05003	10.41	57.91	4.06	-	-	-	-	-	-
1/8" AVLUG	27	STANDARD - FLAT	07150-03004	10.41	29.97	5.08	27	STANDARD - TAPERED	07170-03104	10.41	30.23	5.08
	27	STD. CAM OPERATED - FLAT	07170-04600	10.41	29.97	5.08	28	LONG - FLAT	07150-04004	10.41	55.37	5.08
	28	LONG CURVED - FLAT	07150-05004	10.41	53.85	5.08	28	LONG CAM OPERATED - FLAT	07170-05000	10.41	55.37	5.08
2.5mm, 4-40 UNC AVSERT	29	STANDARD - FLAT	07150-03003	9.14	33.02	4.06	-	-	-	-	-	-
3.0mm, 6-32 UNC AVSERT	30	STANDARD - FLAT	07150-03004	10.41	29.97	5.08	30	STD. CAM OPERATED - FLAT	07170-04600	10.41	29.97	5.08
2.5mm AVTRONIC	31	STANDARD - FLAT	07150-03003	9.14	33.02	4.06	31	LTD. ACCESS CAM OPERATED	07271-08000	10.41	29.97	4.06
	32	LONG - FLAT	07150-04003	10.41	58.42	4.06	-	-	-	-	-	-
2.8mm AVTRONIC	33	STANDARD - FLAT	07271-05600	9.14	33.02	4.06	34	LTD. ACCESS CAM OPERATED	07271-08100	10.16	29.97	4.06
	35	LONG - FLAT	07271-05900	10.41	58.42	4.06	-	-	-	-	-	-
3.0mm RIVSCREW	36	STD. CAM OPERATED - HF	07271-03000	10.41	29.97	6.10	-	-	-	-	-	-
3.5mm RIVSCREW	37	STD. CAM OPERATED - HF	07271-03500	10.41	29.97	6.10	-	-	-	-	-	-
4.0mm RIVSCREW	38	STD. CAM OPERATED - HF	07271-04000	10.41	29.97	6.35	-	-	-	-	-	-

These nose jaws are suitable for placing Chobert rivets with a Universal Head Form. When used on the equivalent size of Briv, the highest possible clench is achieved. Note that when using Briv fasteners, the maximum grip is reduced by approximately 0.015" (0.4 mm).

MANDRELS & MANDREL FOLLOWER SPRINGS

Mandrels and mandrel follower springs, illustrated on page 9 need to be selected to suit the fastener type and size as well as the size of the hole in the application. Use of the wrong mandrel could increase the risk of breakage and the wear of the mandrel head. Feeding problems could occur if the wrong mandrel follower spring is used.

IMPORTANT

READ THE SAFETY INSTRUCTIONS on pages 2 and 3 carefully.
While a small amount of wear and marking will naturally occur through normal and correct use of mandrels, they must be regularly examined for excessive wear and marking, with particular attention to the head diameter, the tail jaw gripping area of the shank or heavy pitting of the shank and any mandrel distortion. Mandrels which fail during use could forcibly exit the tool. It is the customer's responsibility to ensure that mandrels are replaced before any excessive levels of wear and always before the maximum recommended number of placings. Contact your Avdel representative who will let you know what that figure is by measuring the broach load of your application with our calibrated measuring tool. These tools can also be purchased under part number 07900-09080, supplied with all necessary information for testing.

CHOBERT AND GROVIT — IMPERIAL

For mandrel or mandrel follower spring selection, follow instructions on page 15.

FASTENER	REF. Nº	HOLE SIZE	STANDARD MANDREL - GREEN					HOLE SIZE	1ST OVERSIZE MANDREL - YELLOW					SPRING PART Nº
			HEAD Ø	MANDREL PART Nº	P MAX.	# S/R MANDREL PART Nº	P MAX.		HEAD Ø	MANDREL PART Nº	P MAX.	# S/R MANDREL PART Nº	P MAX.	
3/32" CHOBERT & GROVIT	1	AS REC.	.0725	07150-06003	.166	07150-08003	.071	+.0015	.074	07150-06303	.174	-	-	07150-06803
	1	-	-	-	-	-	-	+.0035	.076	-	-	07150-08103	.078	07150-06803
	2	AS REC.	.0725	07150-06003	.166	07150-08003	.071	+.0015	.074	07150-06303	.174	-	-	07170-06873
	2	-	-	-	-	-	-	+.0035	.076	-	-	07150-08103	.078	07170-06873
	3	AS REC.	.0725	07150-06003	.166	07150-08003	.071	+.0015	.074	07150-06303	.174	-	-	07170-06903
	3	-	-	-	-	-	-	+.0035	.076	-	-	07150-08103	.078	07170-06903
	4	AS REC.	.0725	07150-07003	.166	07150-09003	.071	+.0035	.076	-	-	07150-09103	.078	07150-07803
1/8" CHOBERT & GROVIT	5	AS REC.	.088	07150-06004	.216	07150-08004	.090	+.004	.092	07150-06104	.237	07150-08104	.098	07150-06804
	6	AS REC.	.088	07150-07004	.216	07150-09004	.090	+.004	.092	07150-07104	.237	07150-09104	.098	07150-07804
5/32" CHOBERT & GROVIT	7	AS REC.	.107	07150-06005	.244	07150-08005	.100	+.008	.115	07150-06105	.284	07150-08105	.116	07170-06875
	7	-	-	-	-	-	-	-	-	-	-	-	-	-
	8	AS REC.	.107	07150-07005	.244	07150-09005	.100	+.008	.115	07150-07105	.284	07150-09105	.116	07170-07875
	8	-	-	-	-	-	-	-	-	-	-	-	-	-
3/16" CHOBERT & GROVIT	9	AS REC.	.132	07150-06006	.247	07150-08006	.102	+.014	.146	07150-06106	.320	07150-08106	.130	07170-06876
	9	-	-	-	-	-	-	-	-	-	-	-	-	-
	10	AS REC.	.132	07150-07006	.247	07150-09006	.102	+.014	.146	07150-07106	.320	07150-09106	.130	07170-07876
	10	-	-	-	-	-	-	-	-	-	-	-	-	-
1/4" CHOBERT	11	AS REC.	.184	07150-06008	.268	07150-08008	.110	+.012	.196	07150-06108	.330	07150-08108	.134	07150-06808
	12	AS REC.	.184	07150-07008	.268	07150-09008	.110	+.012	.196	07150-07108	.330	07150-09108	.134	07150-07808

FASTENER	REF. Nº	HOLE SIZE	2ND OVERSIZE MANDREL - BLUE					HOLE SIZE	3RD OVERSIZE MANDREL - RED					SPRING PART Nº
			HEAD Ø	MANDREL PART Nº	P MAX.	# S/R MANDREL PART Nº	P MAX.		HEAD Ø	MANDREL PART Nº	P MAX.	# S/R MANDREL PART Nº	P MAX.	
3/32" CHOBERT & GROVIT	1	+.0035	.076	07150-06103	.185	-	-	-	-	-	-	-	-	07150-06803
	1	-	-	-	-	-	-	-	-	-	-	-	-	-
	2	+.0035	.076	07150-06103	.185	-	-	-	-	-	-	-	-	07170-06873
	2	-	-	-	-	-	-	-	-	-	-	-	-	-
	3	+.0035	.076	07150-06103	.185	-	-	-	-	-	-	-	-	07170-06903
	3	-	-	-	-	-	-	-	-	-	-	-	-	-
	4	+.0035	.076	07150-07103	.185	-	-	-	-	-	-	-	-	07150-07803
1/8" CHOBERT & GROVIT	5	+.010	.098	07150-06204	.268	07150-08204	.110	+.014	.102	07150-06304	.288	07150-08304	.118	07150-06804
	6	+.010	.098	07150-07204	.268	07150-09204	.110	+.014	.102	07150-07304	.288	07150-09304	.118	07150-07804
5/32" CHOBERT & GROVIT	7	+.015	.122	07150-06205	.320	07150-08205	.130	-	-	-	-	-	-	07170-06875
	7	-	-	-	-	-	-	+.025	.132	07150-06305	.372	07150-08305	.150	07150-06805
	8	+.015	.122	07150-07205	.320	07150-09205	.130	-	-	-	-	-	-	07170-07875
	8	-	-	-	-	-	-	+.025	.132	07150-07305	.372	07150-09305	.150	07150-07805
3/16" CHOBERT & GROVIT	9	-	-	-	-	-	-	-	-	-	-	-	-	-
	9	+.024	.156	07150-06206	.372	07150-08206	.150	-	-	-	-	-	-	07150-06806
	10	-	-	-	-	-	-	-	-	-	-	-	-	-
	10	+.024	.156	07150-07206	.372	07150-09206	.150	-	-	-	-	-	-	07150-07806
1/4" CHOBERT	11	-	-	-	-	-	-	-	-	-	-	-	-	-
	12	-	-	-	-	-	-	-	-	-	-	-	-	-

S/R: Short Reach Mandrel. See page 17 and 18 for explanation.

Tables below left and right and over the next 4 pages list part numbers of all mandrels and mandrel follower springs available per fastener or group of fasteners, i.e. for Chobert and Grovit on these pages.

While fastener sizes are always shown in their specified units, each table has been produced twice to offer dimensions in imperial units on the left-hand page then in metric units on the right-hand page. These 'Mandrel Selection' tables cross-reference with the 'Nose Jaw Selection' tables on pages 13 and 14 through the 'Ref. Nº' column.
It is the diameter of the head at the end of a mandrel which when pulled through controls the expansion of the fastener body.

While there are different head shapes to suit different types of fasteners (see illustration on page 18), progressive head sizes are needed to reflect manufacturing tolerances on the diameter of the hole in your application so that the fastener always expands sufficiently to fill the hole.

Too large a mandrel head would overstress the mandrel and mandrels which fail during use could forcibly exit the tool.
Selection tables are arranged into four 'mandrel size' sections, ranging from 'standard' to '3rd oversize', each being colour coded as per the end of the mandrel heads themselves.

CHOBERT AND GROVIT — METRIC

FASTENER	REF. Nº	HOLE SIZE	STANDARD MANDREL - GREEN					HOLE SIZE	1ST OVERSIZE MANDREL - YELLOW					SPRING PART Nº
			HEAD Ø	MANDREL PART Nº	P MAX.	# S/R MANDREL PART Nº	P MAX.		HEAD Ø	MANDREL PART Nº	P MAX.	# S/R MANDREL PART Nº	P MAX.	
3/32" CHOBERT & GROVIT	1	AS REC.	1.84	07150-06003	4.22	07150-08003	1.80	+.04	1.88	07150-06303	4.42	-	-	07150-06803
	1	-	-	-	-	-	-	+.09	1.93	-	-	07150-08103	1.98	07150-06803
	2	AS REC.	1.84	07150-06003	4.22	07150-08003	1.80	+.04	1.88	07150-06303	4.42	-	-	07170-06873
	2	-	-	-	-	-	-	+.09	1.93	-	-	07150-08103	1.98	07170-06873
	3	AS REC.	1.84	07150-06003	4.22	07150-08003	1.80	+.04	1.88	07150-06303	4.42	-	-	07170-06903
	3	-	-	-	-	-	-	+.09	1.93	-	-	07150-08103	1.98	07170-06903
	4	AS REC.	1.84	07150-07003	4.22	07150-09003	1.80	+.09	1.93	-	-	07150-09103	1.98	07150-07803
1/8" CHOBERT & GROVIT	5	AS REC.	2.24	07150-06004	5.49	07150-08004	2.29	+.10	2.34	07150-06104	6.02	07150-08104	2.49	07150-06804
	6	AS REC.	2.24	07150-07004	5.49	07150-09004	2.29	+.10	2.34	07150-07104	6.02	07150-09104	2.49	07150-07804
5/32" CHOBERT & GROVIT	7	AS REC.	2.72	07150-06005	6.20	07150-08005	2.54	+.20	2.92	07150-06105	7.21	07150-08105	2.95	07170-06875
	7	-	-	-	-	-	-	-	-	-	-	-	-	-
	8	AS REC.	2.72	07150-07005	6.20	07150-09005	2.54	+.20	2.92	07150-07105	7.21	07150-09105	2.95	07170-07875
	8	-	-	-	-	-	-	-	-	-	-	-	-	-
3/16" CHOBERT & GROVIT	9	AS REC.	3.35	07150-06006	6.27	07150-08006	2.59	+.35	3.71	07150-06106	8.13	07150-08106	3.30	07170-06876
	9	-	-	-	-	-	-	-	-	-	-	-	-	-
	10	AS REC.	3.35	07150-07006	6.27	07150-09006	2.59	+.35	3.71	07150-07106	8.13	07150-09106	3.30	07170-07876
	10	-	-	-	-	-	-	-	-	-	-	-	-	-
1/4" CHOBERT	11	AS REC.	4.67	07150-06008	6.81	07150-08008	2.79	+.30	4.98	07150-06108	8.38	07150-08108	3.40	07150-06808
	12	AS REC.	4.67	07150-07008	6.81	07150-09008	2.79	+.30	4.98	07150-07108	8.38	07150-09108	3.40	07150-07808

FASTENER	REF. Nº	HOLE SIZE	2ND OVERSIZE MANDREL - BLUE					HOLE SIZE	3RD OVERSIZE MANDREL - RED					SPRING PART Nº
			HEAD Ø	MANDREL PART Nº	P MAX.	# S/R MANDREL PART Nº	P MAX.		HEAD Ø	MANDREL PART Nº	P MAX.	# S/R MANDREL PART Nº	P MAX.	
3/32" CHOBERT & GROVIT	1	+.09	1.93	07150-06103	4.70	-	-	-	-	-	-	-	-	07150-06803
	1	-	-	-	-	-	-	-	-	-	-	-	-	-
	2	+.09	1.93	07150-06103	4.70	-	-	-	-	-	-	-	-	07170-06873
	2	-	-	-	-	-	-	-	-	-	-	-	-	-
	3	+.09	1.93	07150-06103	4.70	-	-	-	-	-	-	-	-	07170-06903
	3	-	-	-	-	-	-	-	-	-	-	-	-	-
	4	+.09	1.93	07150-07103	4.70	-	-	-	-	-	-	-	-	07150-07803
1/8" CHOBERT & GROVIT	5	+.25	2.49	07150-06204	6.81	07150-08204	2.79	+.35	2.59	07150-06304	7.32	07150-08304	3.00	07150-06804
	6	+.25	2.49	07150-07204	6.81	07150-09204	2.79	+.35	2.59	07150-07304	7.32	07150-09304	3.00	07150-07804
5/32" CHOBERT & GROVIT	7	+.38	3.10	07150-06205	8.13	07150-08205	3.30	-	-	-	-	-	-	07170-06875
	7	-	-	-	-	-	-	+.63	3.35	07150-06305	9.45	07150-08305	3.81	07150-06805
	8	+.38	3.10	07150-07205	8.13	07150-09205	3.30	-	-	-	-	-	-	07170-07875
	8	-	-	-	-	-	-	+.63	3.35	07150-07305	9.45	07150-09305	3.81	07150-07805
3/16" CHOBERT & GROVIT	9	-	-	-	-	-	-	-	-	-	-	-	-	-
	9	+.60	3.96	07150-06206	9.45	07150-08206	3.81	-	-	-	-	-	-	07150-06806
	10	-	-	-	-	-	-	-	-	-	-	-	-	-
	10	+.60	3.96	07150-07206	9.45	07150-09206	3.81	-	-	-	-	-	-	07150-07806
1/4" CHOBERT	11	-	-	-	-	-	-	-	-	-	-	-	-	-
	12	-	-	-	-	-	-	-	-	-	-	-	-	-

S/R: Short Reach Mandrel. See page 17 and 18 for explanation.

To find the correct part number of a mandrel for a particular application, read the instructions below after you have gathered the following information as per example alongside. Answers for the example are shown in *grey italic*.

FASTENER NAME	*example*	*Chobert*
FASTENER SIZE		*1/8"*
DATASHEET		*Series 1125*
APPLICATION HOLE SIZE		*0.1335"*
CLEARANCE BEHIND APPLICATION		*Infinite*
'REF.Nº' FROM NOSE JAW SELECTION TABLE		*5 (standard flat)*

- Subtract the minimum hole size recommended (AS REC.) in the fastener datasheet from the actual application hole size. *-example: 0.005.*
- Turn to the page with the 'Mandrel Selection' table for your fastener, selecting either the imperial or the metric dimensions table (pages 15 to 20). *-example: page 15.*
- Starting in the 'Standard Mandrel - Green' section, find your fastener size in the left hand column. *-example: 1/8" Chobert & Grovit.*
- If you selected a nose jaw which can place your fastener, you should now be able to find a line within your fastener section with the same 'Ref. Nº' as that from the 'Nose Jaw Selection' table. *-example: 5.*
  This is your line 'REF. Nº' in which you will find both your mandrel and mandrel follower spring part number. This line continues into the second half of the table for '2nd' and '3rd' oversize mandrels.
- Scan along that line to the 'hole size' columns and select whichever is nearest or equal to the figure calculated in step one. You may now read the mandrel part number next to the 'hole size'. *-example: 07150-06104.*
- For Chobert and Grovit only, most mandrels are also available in a 'short reach' version (see illustration on page 18). Short reach mandrels are used to minimise the possibility of the mandrel head contacting a rear obstruction. This would result in the underside of the fastener head not seating properly on the application surface, causing a lack of clench in the joint.
- Whichever size of mandrel you settle on, you will also need to check that the 'P' figure against that mandrel is adequate. 'P' is the clearance required for the mandrel head at the back of the application IN ADDITION to the length of the fastener protruding through the application, as shown in the drawing on page 18.
- You may now read the corresponding mandrel follower spring part number in the right-hand column of the table. *-example: 07150-06804.*

In all cases, satisfactory clenching of the joint should be assessed particularly if the size of the hole in your application is very close to the next oversize hole condition, when it will be safe to select the greater size of mandrel to obtain a higher clench. REMEMBER that this will increase the broach load and reduce the mandrel life.

BRIV — IMPERIAL

For mandrel or mandrel follower spring selection, follow instructions above.

FASTENER	REF. Nº	HOLE SIZE	STANDARD MANDREL - GREEN			HOLE SIZE	1ST OVERSIZE MANDREL - YELLOW			SPRING PART Nº
			HEAD Ø	MANDREL PART Nº	P MAX.		HEAD Ø	MANDREL PART Nº	P MAX.	
3/32" BRIV Brass only	13	AS REC.	.072	07150-06013	.119	+.004	.076	07150-06113	.123	07170-06873
	14	AS REC.	.072	07150-06013	.119	+.004	.076	07150-06113	.123	07170-06903
1/8" BRIV Al. Alloy, Brass, Steel	15	AS REC.	.092	07271-06414	.120	+.005	.097	07271-06514	.126	07150-06814
	16	AS REC.	.092	07271-07414	.120	+.005	.097	07271-07514	.126	07150-07814
5/32" BRIV Al. Alloy, Brass, Steel	17	AS REC.	.110	07150-06015	.136	+.005	.115	07150-06115	.142	07170-06875
	18	AS REC.	.110	07150-07015	.136	+.005	.115	07150-07115	.142	07170-07875
5/32" BRIV St.Steel only	19	AS REC.	.120	07170-06805	.126	+.005	.125	07170-06825	.132	07170-06875
	20	AS REC.	.120	07170-07805	.126	+.005	.125	07170-07825	.132	07170-07875
3/16" BRIV Al. Alloy, Brass, Steel	21	AS REC.	.141	07150-06016	.157	+.005	.146	07150-06116	.164	07170-06876
	22	AS REC.	.141	07150-07016	.157	+.005	.146	07150-07116	.164	07170-07876
3/16" BRIV St.Steel only	23	AS REC.	.153	07170-06806	.150	+.005	.158	07170-06826	.156	07170-06876
	24	AS REC.	.153	07170-07806	.150	+.005	.158	07170-07826	.156	07170-07876

FASTENER	REF. Nº	HOLE SIZE	2ND OVERSIZE MANDREL - BLUE			HOLE SIZE	3RD OVERSIZE MANDREL - RED			SPRING PART Nº
			HEAD Ø	MANDREL PART Nº	P MAX.		HEAD Ø	MANDREL PART Nº	P MAX.	
3/32" BRIV Brass only	13	+.008	.079	07150-06213	.126	-	-	-	-	07170-06873
	14	+.008	.079	07150-06213	.126	-	-	-	-	07170-06903
1/8" BRIV Al. Alloy, Brass, Steel	15	+.010	.102	07271-06614	.133	-	-	-	-	07150-06814
	16	+.010	.102	07271-07614	.133	-	-	-	-	07150-07814
5/32" BRIV Al. Alloy, Brass, Steel	17	+.010	.120	07150-06215	.149	-	-	-	-	07170-06875
	18	+.010	.120	07150-07215	.149	-	-	-	-	07170-07875
5/32" BRIV St.Steel only	19	-	-	-	-	-	-	-	-	-
	20	-	-	-	-	-	-	-	-	-
3/16" BRIV Al. Alloy, Brass, Steel	21	+.010	.151	07150-06216	.170	+.012	.153	07150-06316	.173	07170-06876
	22	+.010	.151	07150-07216	.170	+.012	.153	07150-07316	.173	07170-07876
3/16" BRIV St.Steel only	23	-	-	-	-	-	-	-	-	-
	24	-	-	-	-	-	-	-	-	-

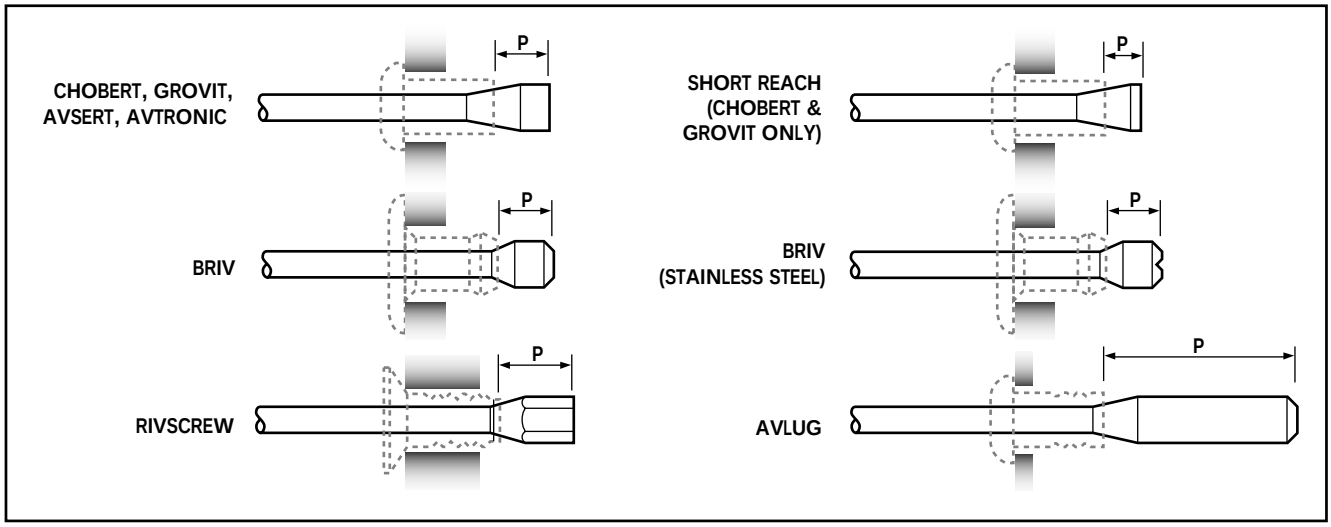

Mandrel head types and 'P' length.

Mandrels for stainless steel Briv are easily identifiable by a 'V' cut in the end of the mandrel heads.

When using curved nose jaws, mandrels have to be bent by hand to match the curvature of the nose jaw, thus ensuring good feed of fasteners.

BRIV METRIC

FASTENER	REF. Nº	HOLE SIZE	STANDARD MANDREL - GREEN			HOLE SIZE	1ST OVERSIZE MANDREL - YELLOW			SPRING PART Nº
			HEAD Ø	MANDREL PART Nº	P MAX.		HEAD Ø	MANDREL PART Nº	P MAX.	
3/32" BRIV Brass only	13	AS REC.	1.83	07150-06013	3.02	+.10	1.93	07150-06113	3.12	07170-06873
	14	AS REC.	1.83	07150-06013	3.02	+.10	1.93	07150-06113	3.12	07170-06903
1/8" BRIV Al. Alloy, Brass, Steel	15	AS REC.	2.34	07271-06414	3.05	+.13	2.46	07271-06514	3.20	07150-06814
	16	AS REC.	2.34	07271-07414	3.05	+.13	2.46	07271-07514	3.20	07150-07814
5/32" BRIV Al. Alloy, Brass, Steel	17	AS REC.	2.79	07150-06015	3.45	+.13	2.92	07150-06115	3.61	07170-06875
	18	AS REC.	2.79	07150-07015	3.45	+.13	2.92	07150-07115	3.61	07170-07875
5/32" BRIV St.Steel only	19	AS REC.	3.05	07170-06805	3.20	+.13	3.18	07170-06825	3.35	07170-06875
	20	AS REC.	3.05	07170-07805	3.20	+.13	3.18	07170-07825	3.35	07170-07875
3/16" BRIV Al. Alloy, Brass, Steel	21	AS REC.	3.58	07150-06016	3.99	+.13	3.71	07150-06116	4.17	07170-06876
	22	AS REC.	3.58	07150-07016	3.99	+.13	3.71	07150-07116	4.17	07170-07876
3/16" BRIV St.Steel only	23	AS REC.	3.89	07170-06806	3.81	+.13	4.01	07170-06826	3.96	07170-06876
	24	AS REC.	3.89	07170-07806	3.81	+.13	4.01	07170-07826	3.96	07170-07876

FASTENER	REF. Nº	HOLE SIZE	2ND OVERSIZE MANDREL - BLUE			HOLE SIZE	3RD OVERSIZE MANDREL - RED			SPRING PART Nº
			HEAD Ø	MANDREL PART Nº	P MAX.		HEAD Ø	MANDREL PART Nº	P MAX.	
3/32" BRIV Brass only	13	+.20	2.01	07150-06213	3.20	-	-	-	-	07170-06873
	14	+.20	2.01	07150-06213	3.20	-	-	-	-	07170-06903
1/8" BRIV Al. Alloy, Brass, Steel	15	+.25	2.59	07271-06614	3.38	-	-	-	-	07150-06814
	16	+.25	2.59	07271-07614	3.38	-	-	-	-	07150-07814
5/32" BRIV Al. Alloy, Brass, Steel	17	+.25	3.05	07150-06215	3.78	-	-	-	-	07170-06875
	18	+.25	3.05	07150-07215	3.78	-	-	-	-	07170-07875
5/32" BRIV St.Steel only	19	-	-	-	-	-	-	-	-	-
	20	-	-	-	-	-	-	-	-	-
3/16" BRIV Al. Alloy, Brass, Steel	21	+.25	3.84	07150-06216	4.32	+.30	3.85	07150-06316	4.39	07170-06876
	22	+.25	3.84	07150-07216	4.32	+.30	3.85	07150-07316	4.39	07170-07876
3/16" BRIV St.Steel only	23	-	-	-	-	-	-	-	-	-
	24	-	-	-	-	-	-	-	-	-

AVLUG, AVSERT, AVTRONIC & RIVSCREW

IMPERIAL

For mandrel or mandrel follower spring selection, follow instructions on page 15.

FASTENER	REF. Nº	HOLE SIZE	STANDARD MANDREL - GREEN			HOLE SIZE	1ST OVERSIZE MANDREL - YELLOW			SPRING PART Nº
			HEAD Ø	MANDREL PART Nº	P MAX.		HEAD Ø	MANDREL PART Nº	P MAX.	
3/32" AVLUG	25	AS REC.	.076	07150-06603	.353	+.005	.081	07150-06703	.478	07150-06803
	26	AS REC.	.076	07150-07603	.353	+.003	.079	07150-07703	.368	07150-07803
1/8" AVLUG	27	AS REC.	.098	07150-06604	.593	-	-	-	-	07150-06804
	28	AS REC.	.098	07150-07604	.593	-	-	-	-	07150-07804
2.5mm, 4-40 UNC AVSERT	29	AS REC.	.0725	07150-06003	.145	-	-	-	-	07150-06803
3.0mm, 6-32 UNC AVSERT	30	AS REC.	.088	07150-06004	.185	-	-	-	-	07150-06804
2.5mm AVTRONIC	31	AS REC.	.070	07170-06025	.140	+.003	.073	07170-06125	.140	07150-06803
	32	AS REC.	.070	07170-07025	.140	+.003	.073	07170-07125	.140	07150-07803
2.8mm AVTRONIC	33	AS REC.	.079	07170-06028	.150	+.003	.082	07170-06128	.150	07170-06528
	34	AS REC.	.079	07170-06028	.150	+.003	.082	07170-06128	.150	07170-06873
	35	AS REC.	.079	07170-07028	.150	+.003	.082	07170-07128	.150	07170-07528
3.0mm RIVSCREW	36	AS REC.	* .065	07271-06030	.127	-	-	-	-	07271-06630
3.5mm RIVSCREW	37	AS REC.	* .0825	07271-06035	.132	-	-	-	-	07271-06635
4.0mm RIVSCREW	38	AS REC.	* .103	07271-06140	.150	-	-	-	-	07271-06640

* These Dimensions are Across Flats

FASTENER	REF. Nº	HOLE SIZE	2ND OVERSIZE MANDREL - BLUE			HOLE SIZE	3RD OVERSIZE MANDREL - RED			SPRING PART Nº
			HEAD Ø	MANDREL PART Nº	P MAX.		HEAD Ø	MANDREL PART Nº	P MAX.	
3/32" AVLUG	25	-	-	-	-	-	-	-	-	-
	26	-	-	-	-	-	-	-	-	-
1/8" AVLUG	27	-	-	-	-	-	-	-	-	-
	28	-	-	-	-	-	-	-	-	-
2.5mm, 4-40 UNC AVSERT	29	-	-	-	-	-	-	-	-	-
3.0mm, 6-32 UNC AVSERT	30	-	-	-	-	-	-	-	-	-
2.5mm AVTRONIC	31	+.006	.076	07170-06225	.140	-	-	-	-	07150-06803
	32	+.006	.076	07170-07225	.140	-	-	-	-	07150-07803
2.8mm AVTRONIC	33	+.006	.085	07170-06228	.150	-	-	-	-	07170-06528
	34	+.006	.085	07170-06228	.150	-	-	-	-	07170-06873
	35	+.006	.085	07170-07228	.150	-	-	-	-	07170-07528
3.0mm RIVSCREW	36	-	-	-	-	-	-	-	-	-
3.5mm RIVSCREW	37	-	-	-	-	-	-	-	-	-
4.0mm RIVSCREW	38	-	-	-	-	-	-	-	-	-

AVLUG, AVSERT, AVTRONIC & RIVSCREW

METRIC

FASTENER	LINE Nº	HOLE SIZE	STANDARD MANDREL - GREEN			HOLE SIZE	1ST OVERSIZE MANDREL - YELLOW			SPRING PART Nº
			HEAD Ø	MANDREL PART Nº	P MAX.		HEAD Ø	MANDREL PART Nº	P MAX.	
3/32" AVLUG	1	AS REC.	1.93	07150-06603	8.97	+.10	2.06	07150-06703	12.14	07150-06803
	2	AS REC.	1.93	07150-07603	8.97	+.10	2.01	07150-07703	9.35	07150-07803
1/8" AVLUG	3	AS REC.	2.49	07150-06604	15.06	-	-	-	-	07150-06804
	4	AS REC.	2.49	07150-07604	15.06	-	-	-	-	07150-07804
2.5mm, 4-40 UNC AVSERT	5	AS REC.	1.84	07150-06003	3.68	-	-	-	-	07150-06803
3.0mm, 6-32 UNC AVSERT	6	AS REC.	2.24	07150-06004	4.70	-	-	-	-	07150-06804
2.5mm AVTRONIC	7	AS REC.	1.78	07170-06025	3.56	+.07	1.85	07170-06125	3.56	07150-06803
	8	AS REC.	1.78	07170-07025	3.56	+.07	1.85	07170-07125	3.56	07150-07803
2.8mm AVTRONIC	9	AS REC.	2.01	07170-06028	3.81	+.07	2.08	07170-06128	3.81	07170-06528
	10	AS REC.	2.01	07170-06028	3.81	+.07	2.08	07170-06128	3.81	07170-06873
	11	AS REC.	2.01	07170-07028	3.81	+.07	2.08	07170-07128	3.81	07170-07528
3.0mm RIVSCREW	12	AS REC.	* 1.65	07271-06030	3.23	-	-	-	-	07271-06630
3.5mm RIVSCREW	13	AS REC.	* 2.10	07271-06035	3.35	-	-	-	-	07271-06635
4.0mm RIVSCREW	14	AS REC.	* 2.62	07271-06140	3.81	-	-	-	-	07271-06640

* These Dimensions are Across Flats

FASTENER	LINE Nº	HOLE SIZE	2ND OVERSIZE MANDREL - BLUE			HOLE SIZE	3RD OVERSIZE MANDREL - RED			SPRING PART Nº
			HEAD Ø	MANDREL PART Nº	P MAX.		HEAD Ø	MANDREL PART Nº	P MAX.	
3/32" AVLUG	1	-	-	-	-	-	-	-	-	-
	2	-	-	-	-	-	-	-	-	-
1/8" AVLUG	3	-	-	-	-	-	-	-	-	-
	4	-	-	-	-	-	-	-	-	-
2.5mm, 4-40 UNC AVSERT	5	-	-	-	-	-	-	-	-	-
3.0mm, 6-32 UNC AVSERT	6	-	-	-	-	-	-	-	-	-
2.5mm AVTRONIC	7	+.15	1.93	07170-06225	3.56	-	-	-	-	07150-06803
	8	+.15	1.93	07170-07225	3.56	-	-	-	-	07150-07803
2.8mm AVTRONIC	9	+.15	2.16	07170-06228	3.81	-	-	-	-	07170-06528
	10	+.15	2.16	07170-06228	3.81	-	-	-	-	07170-06873
	11	+.15	2.16	07170-07228	3.81	-	-	-	-	07170-07528
3.0mm RIVSCREW	12	-	-	-	-	-	-	-	-	-
3.5mm RIVSCREW	13	-	-	-	-	-	-	-	-	-
4.0mm RIVSCREW	14	-	-	-	-	-	-	-	-	-

SERVICING THE TOOL

Regular servicing should be carried out and a comprehensive inspection performed annually or every 500,000 cycles, whichever is sooner.

IMPORTANT

The employer is responsible for ensuring that tool maintenance instructions are given to the appropriate personnel. The operator should not be involved in maintenance or repair unless properly trained.

DAILY

- Daily, before use or when first putting the tool into service, pour a few drops of clean, light lubricating oil into the air inlet of the tool if no lubricator is fitted on air supply. If the tool is in continuous use, the air hose should be disconnected from the main air supply and the tool lubricated every two to three hours.
- Check for air leaks. If damaged, hoses and couplings should be replaced.
- If there is no filter on the pressure regulator, bleed the air line to clear it of accumulated dirt or water before connecting the air hose to the tool. If there is a filter, drain it.
- Check that the nose equipment is correct.
- Check mandrels regularly for signs of wear or damage monitoring the number of placings (read the SAFETY INSTRUCTIONS page 2 and 3).

WEEKLY

- Remove, inspect, clean and grease the tail jaws (refer to 'Tail Jaw Assembly' in the 'Maintenance' section, page 23).

Grease can be ordered as a single item, the part number is shown in the service kit opposite.

MOLY LITHIUM GREASE EP 3753 **SAFETY DATA**	
FIRST AID SKIN: As the grease is completely water resistant it is best removed with an approved emulsifying skin cleaner. INGESTION: Make the individual drink 30ml Milk of Magnesia, preferably in a cup of milk. EYES: Irritant but not harmful. Irrigate with water and seek medical attention. **ENVIRONMENT** Scrape up for burning or disposal on approved site.	**FIRE** FLASH POINT: Above 220°C. Not classified as flammable. Suitable extinguishing media: CO_2, Halon or water spray if applied by an experienced operator. **HANDLING** Use barrier cream or oil resistant gloves **STORAGE** Away from heat and oxidising agent.

For all servicing we recommend the use of the service kit below (part number 07900-02700).

SERVICE KIT					
ITEM PART Nº	DESCRIPTION	Nº OFF	ITEM PART Nº	DESCRIPTION	Nº OFF
07900-00009	3/32" ALLEN KEY	1	07900-00203	TORQUE WRENCH	1
07900-00013	1/8" ALLEN KEY	1	07900-00204	BARREL NUT ADAPTOR ASSEMBLY	1
07900-00157	CIRCLIP PLIERS	1	07900-00206	CYLINDER ASSEMBLY TOOL	1
07900-00092	7/8" x 3/4" SPANNER	2	07900-00238	7/16" x 3/8" SPANNER	1
07900-00158	PIN PUNCH	1	07900-00181	LOCK RING KEY	1
07900-00201	0.05" ALLEN KEY	1	07992-00020	80gm MOLYLITHIUM GREASE E.P.3753	1 TIN

NOTE: Spanner sizes are measured 'across flats' unless otherwise specified.

M A I N T E N A N C E

Every 500000 cycles the tool should be completely dismantled and components replaced where worn, damaged or when recommended. All 'O' rings and seals should be renewed and lubricated with Moly Lithium grease EP 3753 before assembling.

I M P O R T A N T

Safety Instructions appear on page 2 & 3.
The employer is responsible for ensuring that tool maintenance instructions are given to the appropriate personnel.
The operator should not be involved in maintenance or repair of the tool unless properly trained.

The airline must be disconnected before any servicing or dismantling is attempted, unless specifically instructed otherwise.

It is recommended that any dismantling operation be carried out in clean conditions.

Item **numbers in bold** refer to the general assembly and parts list on page 25 and 26.

Prior to dismantling the tool, you will need to remove the nose equipment.

For total servicing of the tool itself, we advise you proceed with dismantling of sub-assemblies in the order shown below, starting with either the handle assembly or the manifold assembly, depending on your model.

HANDLE ASSEMBLY (07271 & 07274 Models)

- To remove handle assembly **56**, remove cushion **57** to gain access to screws **36**.
- Remove six (07271 Model), or four (07274 Model) screws **36**.
- Remove handle assembly **56**.
- Remove the trigger valve by unscrewing adjuster **50** and lifting out button **49**.
- Withdraw valve plunger **43**, spring **46**, valve plunger washer **51** and plunger seal **47**.
- The design of the valve is such that a minimum of service is required during the tool life. Servicing should only be carried out if absolutely necessary.
- If so, unscrew retaining screw **44**, withdraw spring **45**, 'O' ring **48** and ball **42**.

- When assembling lubricate bores with Moly Lithium grease EP 3753.

- When assembling replace retaining screw **44** using a low strength anaerobic adhesive (e.g. Permabond A121 or A137). The adhesive should be spread under the head of retaining screw **44** for an approximate length of 3.2 mm (1/8") along the screw thread.
- Always fit a new self adhesive cushion **57**.

- Complete assembly in reverse order of dismantling.

** refers to items included in the Avdel service kit. For complete list see above.*

TAIL JAW ASSEMBLY

- Unscrew locking ring **20** with special lock ring key* provided with the tool and withdraw the tail jaw cylinder assembly.
- Noting the orientation of each part, remove seal **19**, jaw housing spacer **2**, tail jaw housing **10**, spring **8** and rubber spring sleeve **4**.
- Using the circlip pliers* remove internal circlip **3**.
- Invert tail jaw cylinder and shake out tail jaws **9**.
- Place the hook on the lock ring key into the jaw slot of the jaw turret and piston assembly **6** and pull out the jaw turret and piston assembly **6** forward.
- Remove screw **18** in the back of the jaw turret and piston assembly **6** with an Allen key* while holding the turret with a bar inserted into the jaw slot of the turret.
- Clean out the hole in the turret using a 4.7 mm ($^{3}/_{16}$") diameter drill.
- Replace screw **18** using a suitable non-hardening sealing compound (e.g. Red Hermatite).
- Clean and inspect tail jaws **9**, replacing if worn or damaged.
- Clean and inspect tail jaw cylinder assembly **7** for scoring of bore, for wear in the circlip groove or clogging of the airways.
- Clean jaw housing **10**, inspect the internal taper for wear and check the vent hole is clear.
- Check that the free length of the spring **8** is 38.1mm (1.5").
- Replace rubber spring sleeve **4** if damaged.
- Grease tail jaws **9**, turret and piston assembly **6** and the tail jaw cylinder assembly **7** with Moly Lithium EP3753 grease.

- Complete assembly in reverse order of dismantling.

BACK-UP RINGS

- To inspect condition of back-up rings **24**, remove the tail jaw cylinder assembly **7** as described above.
- Slacken socket grub screw **25** in barrel nut **23**.
- Undo the barrel nut **23** using two spanners*.
- Remove spacer **13** and spacing collar **39** and push barrel **59** forward.
- Withdraw bush stops **12**, back-up ring **24** and buffer **15**.

- When assembling, insert buffer **15**, back-up ring **24** and bush stops **12**. (It is essential that these parts are assembled in the correct sequence). On replacement the barrel nut MUST be set with a torque wrench to 15 lbf/ft using the adaptor provided in tool service kit.

- Complete assembly in reverse order of dismantling.

TAIL JAW VALVE (SIDE VALVE) - (07271 & 07274 Models)

- Remove by carefully prising off button **54** and withdrawing spindle **52**.
- Clean and inspect 'O' rings for signs of wear or damage.
- Lubricate bore of valve with Moly Lithium EP3753 grease.

- Assemble in reverse order of dismantling.

** refers to items included in the Avdel service kit. For complete list see page 22.*

AIR CYLINDER ASSEMBLY

- The air cylinder assembly is normally trouble free and will not require any attention for long periods.
- If the air cylinder assembly requires dismantling, service tool part number 07900-00206 will be required.
- There are three pistons on the 07271 model, and only two pistons on the 07274 model.
- To dismantle the air cylinder assembly, remove handle assembly **56** or manifold **69**, as applicable.
- Remove cursor assembly **21**, by inserting a mandrel through the front of the barrel **59** until it engages in the cursor. Pull out the mandrel and cursor together.
- Remove tail jaw assembly **7** as previously described.
- Pull out mandrel guide **17**.
- Slide off plastic sleeve **60** or **65**, easing it over drilled screw **41**.
- Remove screw **25** and remove barrel nut **23**.
- Slide out barrel **59**, spacing collar **39**, spacer **13**, buffer **15**, back-up ring **24** and bush stops **12**.
- Undo rear end cap screws **36**, **29**, **14**, noting their positions.
- On the 07271 & 07274 model, remove drilled screw **41**, then remove end cap **40**.
- Remove gland cup **30**, piston seal diaphragm **31**, piston diaphragm **32** and second spacing collar **39**, noting position of each part.
- On the 07271 model undo cylinder diaphragm seal **32**, two screws **29** and pull out the remaining two pistons and the third spacing collar.
- Insert the cylinder assembly tool* to engage in the front diaphragm with the stem passing through the front of the tool, and tighten lightly with a washer and a nut to hold the diaphragm against the spring pressure, whilst final screws **29** are removed.

- Measure free length of the spring is 139.5 mm (5.5"), replacing if damaged.

- Reassemble using the procedure described below:

- Assemble diaphragm seal assembly **33**, piston spacer **16**, piston diaphragm **32**, gland cup **30** and piston seal diaphragm **31** onto the assembly tool with the spring **22** and insert into the cylinder.
- Draw diaphragm seal assembly **33** into position with the nut and rotate using a tommy bar to align the screw holes.
- Position four screws **29** into diaphragm and fully tighten top two screws **29**.
- Remove assembly tool, then tighten bottom two screws **36**.
- Grease and replace spacing collar **39** and barrel **59**.
- Grease and fit next piston assembly onto barrel **59** and carefully push in the second cylinder diaphragm, rotating it into position with the assembly tool.
- Insert top two screws **29** and replace second spacing collar **39**.
- On the 07274 model replace end cap **40**.
- On the 07271 model replace the final piston and end cap **40**.
- Assemble back-up rings **24**, buffer **15**, spacing collar **39**, spacer **13** and barrel nut **23**, which MUST be set with a torque wrench to 20 Nm (15 lb/ft), using the adaptor and the wrench.
- Lock barrel nut **23** with screw **25**.
- Replace sleeve **60** or **65,** tail jaw cylinder assembly **7**, handle assembly **56** or manifold **69**, as applicable.
- Clean and oil cursor **21** ensuring correct orientation when refitting into the front of barrel **59**. If incorrectly fitted follow the procedure on page 7.

IMPORTANT

Check the tool against daily and weekly servicing.

** refers to items included in the Avdel service kit. For complete list see page 22.*

GENERAL ASSEMBLY OF BASE TOOLS 07271-00200/07273-00200/07274-00200

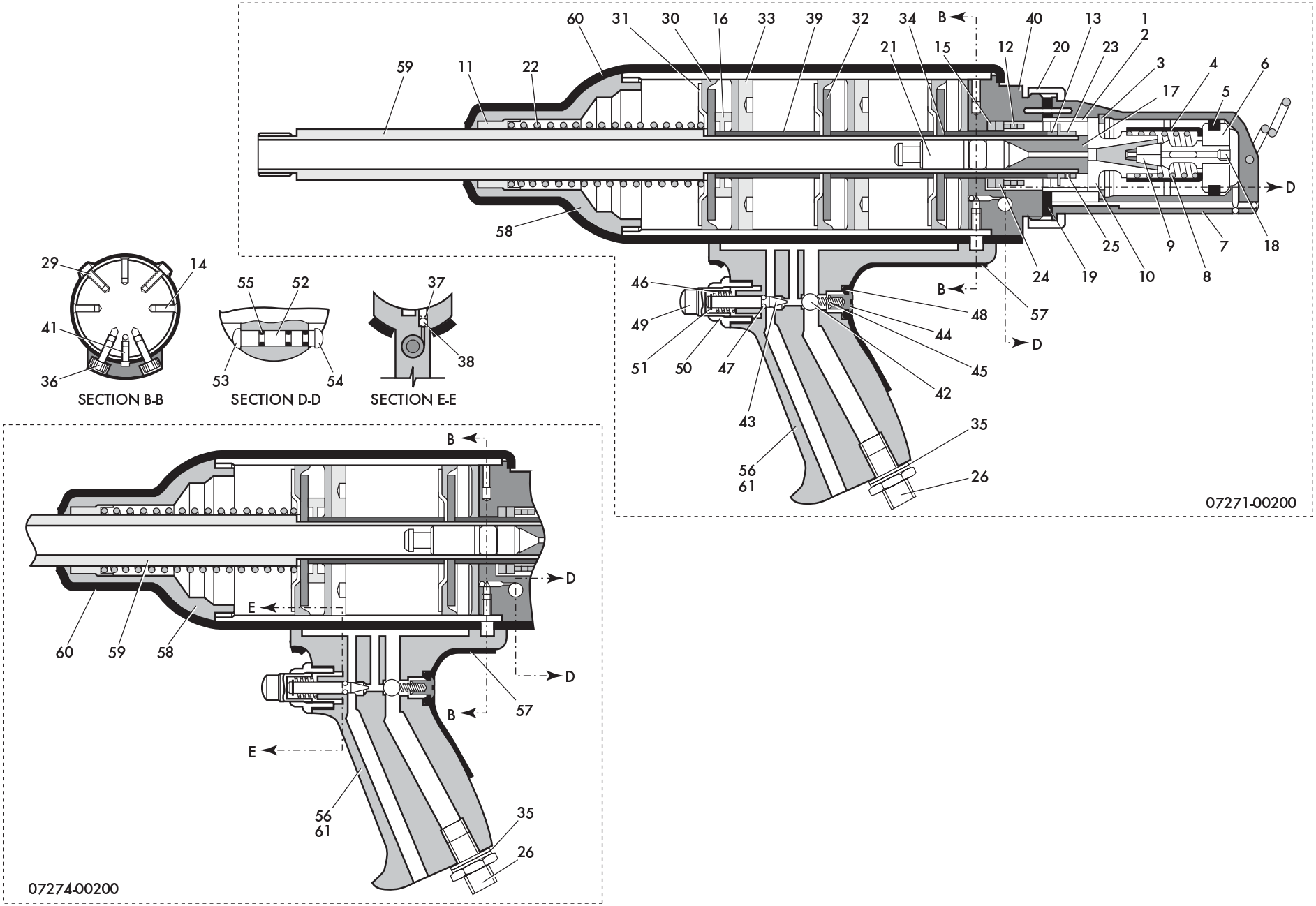

PARTS LIST OF ITEMS COMMON TO 07271-00200/07274-00200 BASE TOOLS

ITEM	PART Nº	DESCRIPTION	QTY	SPARES	ITEM	PART Nº	DESCRIPTION	QTY	SPARES	ITEM	PART Nº	DESCRIPTION	QTY	SPARES
1	07271-00900	TAIL JAW ASSEMBLY	1	-	11	07271-00313	BUSH	1	-	21	07271-01100	CURSOR	1	-
2	07271-00905	JAW HOUSING SPACER	1	-	12	07170-00201	BUSH STOP	3	-	22	07150-00303	SPRING	1	-
3	07004-00051	CIRCLIP	1	-	13	07271-00309	SPACER	1	-	23	07271-00317	BARREL NUT	1	-
4	07271-00906	SPRING SLEEVE	1	-	14	07001-00257	SCREW	3	-	24	07271-00314	BACK UP RING	1	-
5	07003-00132	'O' RING	1	-	15	07271-00324	BUFFER	1	-	25	07001-00243	SCREW	1	-
6	07271-01000	TURRET AND PISTON ASSEMBLY	1	-	16	07273-00302	PISTON SPACER	1	-	26	07005-00041	CONNECTOR	1	-
7	07271-00800	TAIL JAW CYLINDER ASSEMBLY	1	-	17	07271-00323	MANDREL GUIDE	1	-	27	07900-00354	SAFETY LABEL	1	NOT SHOWN
8	07154-00404	SPRING	1	-	18	07001-00267	SCREW	1	-	28	07900-00361	TOOL INSTRUCTION MANUAL	1	NOT SHOWN
9	07151-00403	TAIL JAWS	1 pair	-	19	07271-00201	SEAL	1	-					
10	07271-00903	TAIL JAW HOUSING	1	-	20	07271-00203	LOCK RING	1	-					

07271-00200 PARTS LIST (cont)

ITEM	PART Nº	DESCRIPTION	QTY	SPARES
29	07001-00145	SCREW	6	-
30	07150-00315	GLAND CUP	3	-
31	07271-00304	PISTON SEAL DIAPHRAGM	3	-
32	07271-00306	PISTON DIAPHRAGM	3	-
33	07271-00400	DIAPHRAGM SEAL	2	-
34	07271-00322	GASKET	4	-
35	07005-00015	SEALING WASHER	1	-
36	07001-00264	SCREW	6	-
37	07271-00604	SPRING	1	-
38	03219-00700	BALL	1	-
39	07271-00307	SPACING COLLAR	3	-
40	07271-00500	END CAP	1	-
41	07271-00321	DRILLED SCREW	1	-
42	07007-00457	BALL	1	-
43	07150-00703	VALVE PLUNGER	1	-
44	07150-00704	SCREW	1	-
45	07150-00706	SPRING	1	-
46	07150-00707	SPRING	1	-
47	07150-00708	PLUNGER SEAL	1	-
48	07003-00042	'O' RING	1	-
49	07150-00710	BUTTON	1	-
50	07150-00711	ADJUSTER	1	-
51	07150-00712	WASHER	1	-
52	07271-00506	SPINDLE	1	-
53	07004-00058	CHROME WASHER	1	-
54	07004-00059	BLACK WASHER	1	-
55	07003-00046	'O' RING	3	-
56	07271-03600	HANDLE ASSEMBLY	1	-
57	07271-00204	CUSHION	1	-
58	07271-00316	CYLINDER	1	-
59	07271-01301	BARREL	1	-
60	07271-00320	SLEEVE	1	-
61	07271-01700	HANDLE	1	-

07274-00200 PARTS LIST (cont)

ITEM	PART Nº	DESCRIPTION	QTY	SPARES
29	07001-00145	SCREW	4	-
30	07150-00315	GLAND CUP	2	-
31	07271-00304	PISTON SEAL DIAPHRAGM	2	-
32	07271-00306	PISTON DIAPHRAGM	2	-
33	07271-00400	DIAPHRAGM SEAL	1	-
34	07271-00322	GASKET	3	-
35	07005-00015	SEALING WASHER	1	-
36	07001-00264	SCREW	4	-
37	07271-00604	SPRING	1	-
38	03219-00700	BALL	1	-
39	07271-00307	SPACING COLLAR	2	-
40	07271-00500	END CAP	1	-
41	07271-00321	DRILLED SCREW	1	-
42	07007-00457	BALL	1	-
43	07150-00703	VALVE PLUNGER	1	-
44	07150-00704	SCREW	1	-
45	07150-00706	SPRING	1	-
46	07150-00707	SPRING	1	-
47	07150-00708	PLUNGER SEAL	1	-
48	07003-00042	'O' RING	1	-
49	07150-00710	BUTTON	1	-
50	07150-00711	ADJUSTER	1	-
51	07150-00712	WASHER	1	-
52	07271-00506	SPINDLE	1	-
53	07004-00058	CHROME WASHER	1	-
54	07004-00059	BLACK WASHER	1	-
55	07003-00046	'O' RING	3	-
56	07274-00800	HANDLE ASSEMBLY	1	-
57	07274-00204	CUSHION	1	-
58	07274-01100	CYLINDER	1	-
59	07274-00401	BARREL	1	-
60	07274-00304	SLEEVE	1	-
61	07274-00900	HANDLE	1	-

FAULT DIAGNOSIS

SYMPTOM	POSSIBLE CAUSE	REMEDY
Tool will not place fastener.	→ Low air pressure.	→ Increase air pressure.
	→ Lack of lubrication.	→ Lubricate tool at air inlet point.
	→ High broach load.	→ Check fastener grip and application hole size.
		→ Check for correct size mandrel.
	→ Worn or broken tail jaws.	→ New tail jaws.
	→ Tail jaws switched off.	→ Switch on tail jaws.
'Mandrel Slip' - jaws will not grip mandrel .	→ Worn or dirty jaws.	→ Clean or renew as necessary.
	→ Insufficient air pressure/volume.	→ Increase air pressure/volume.
	→ Tail jaw switch inoperable.	→ Replace switch.
	→ Faulty valve on guard.	→ Return guard for service.
	→ Air leaks to tail jaws.	→ Renew 'O' rings on piston **6**.
	→ Mandrel broken and not reaching tail jaws.	→ Replace mandrel.
Jaws will not release mandrel.	→ Dirty tail jaws or tail jaw housing.	→ Clean and lubricate.
	→ Faulty valve/guard or tail jaw switch.	→ Service or replace as necessary.
Fasteners will not feed through nose jaws.	→ Tail jaws not switched on.	→ Switch on tail jaws.
	→ Worn tail jaws.	→ Renew tail jaws.
	→ Cursor orientation incorrect.	→ Refit, ensuring correct orientation.
	→ Unsuitable nose jaws.	→ Fit correct nose jaws.
	→ Mandrel follower spring not fitted.	→ Fit mandrel follower spring.
	→ Incorrect gap between fastener head and nose jaws when loaded.	→ Set gap to 1.5mm - 3mm ($^1/_{16}$" - $^1/_8$"). See 'Loading the Tool', on page 8.
	→ Cursor sticking.	→ Clean and oil cursor.
	→ Weak outer spring around cursor.	→ Renew cursor.
	→ Incorrect mandrel follower spring fitted.	→ Fit correct mandrel follower spring.
Excessive tail jaw wear	→ High broach load.	→ Check application hole size and thickness and fastener grip capability.
	→ High shock loads through mandrel.	→ Ensure correct number of bush stops.
Feeding more than 1 fastener	→ Mandrel slip.	→ Check as for 'Mandrel Slip', stage 2.
	→ Incorrect gap between fastener head and nose jaws when loaded.	→ Set gap to 1.5mm - 3mm ($^1/_{16}$" - $^1/_8$"). See 'Loading the Tool', on page 8.

Engineered Fastening and Assembly Systems

CE

Declaration of Conformity

We, *Avdel UK Limited, Watchmead Industrial Estate, Welwyn Garden City, Herts, AL7 1LY*

declare under our sole responsibility that the product

type 0727

Serial Nº _____

to which this declaration relates is in conformity with the following standards or other formative documents

EN292 part 1 and part 2

ISO 8662 part 1

ISO 3744

ISO PREN792 part 14

following the provisions of the Machine Directive 2006/42/EC

Welwyn Garden City - date of issue _____

A. Seewraj
Product Engineering Manager - Automation Tools

BSI REGISTERED FIRM

BS EN ISO 9001&2: 1994
FM317 FM317/1 FM317/2
FM09651/1 FM09651/2

British Quality Foundation
KEY MEMBER

© Avdel 1995 ™ ® Products mentioned and/or illustrated within this publication are subject to patent, design or copyright protection in many countries

Avdel®

Since 1922 Since 1 936 2010

Our Technology, Your Success

AUSTRALIA
Infastech (Australia) Pty Ltd.
891 Wellington Road
Rowville
Victoria 3178
Tel: +61 3 9765 6400
Fax: +61 3 9765 6445
info@infastech.com.au

CANADA
Avdel Canada Limited
1030 Lorimar Drive
Mississauga
Ontario L5S 1R8
Tel: +1 905 364 0664
Fax: +1 905 364 0678
infoAvdel-Canada@infastech.com

CHINA
Infastech (China) Ltd.
RM 1708, 17/F., Nanyang Plaza,
57 Hung To Rd., Kwun Tong
Hong Kong
Tel: +852 2950 0631
Fax: +852 2950 0022
infochina@infastech.com

FRANCE
Avdel France S.A.S.
33 bis, rue des Ardennes
BP4
75921 Paris Cedex 19
Tel: +33 (0) 1 4040 8000
Fax: +33 (0) 1 4208 2450
AvdelFrance@infastech.com

GERMANY
Avdel Deutschland GmbH
Klusriede 24
30851 Langenhagen
Tel: +49 (0) 511 7288 0
Fax: +49 (0) 511 7288 133
AvdelDeutschland@infastech.com

INDIA
Infastech Fastening Technologies India Private Limited
Plot No OZ-14, Hi Tech SEZ,
SIPCOT Industrial Growth Center,
Oragadam, Sriperumbudur Taluk,
Kanchipuram District,
602105 Tamilnadu
Tel: +91 44 4711 8001
Fax: +91 44 4711 8009
info-in@infastech.com

ITALY
Avdel Italia S.r.l.
Viale Lombardia 51/53
20047 Brugherio (MI)
Tel: +39 039 289911
Fax: +39 039 2873079
vendite@infastech.com

JAPAN
Infastech Kabushiki Kaisha
Center Minami SKY,
3-1 Chigasaki-Chuo, Tsuzuki-ku,
Yokohama-city,
Kanagawa Prefecture
Japan 224-0032
Tel: +81 45 947 1200
Fax: +81 45 947 1205
info@infastech.co.jp

MALAYSIA
Infastech (Malaysia) Sdn Bhd
Lot 63, Persiaran Bunga Tanjung 1,
Senawang Industrial Park
70400 Seremban
Negeri Sembilan
Tel: +606 676 7168
Fax: +606 676 7101
info-my@infastech.com

SINGAPORE
Infastech (Singapore) Pte Ltd.
31 Kaki Bukit Road 3
#05-03/06 Techlink
Singapore, 417818
Tel: +65 6372 5653
Fax: +65 6744 5643
info-sg@infastech.com

SOUTH KOREA
Infastech (Korea) Ltd.
212-4, Suyang-Ri,
Silchon-Eup, Kwangju-City,
Kyunggi-Do, Korea, 464-874
Tel: +82 31 798 6340
Fax: +82 31 798 6342
info@infastech.co.kr

SPAIN
Avdel Spain S.A.
C/ Puerto de la Morcuera, 14
Poligono Industrial Prado Overa
Ctra. de Toledo, km 7,8
28919 Leganés (Madrid)
Tel: +34 91 3416767
Fax: +34 91 3416740
ventas@infastech.com

TAIWAN
Infastech/Tri-Star Limited
No 269-7, Baodong Rd,
Guanmiao Township,
71841 Tainan County,
Taiwan, R.O.C
Tel: +886 6 596 5798 (ext 201)
Fax: +886 6 596 5758
info-tw@infastech.com

UNITED KINGDOM
Avdel UK Limited
Pacific House
2 Swiftfields
Watchmead Industrial Estate
Welwyn Garden City
Hertfordshire AL7 1LY
Tel: +44 (0) 1707 292000
Fax: +44 (0) 1707 292199
enquiries@infastech.com

USA
Avdel USA LLC
614 NC Highway 200 South
Stanfield, North Carolina 28163
Tel: +1 704 888 7100
Fax: +1 704 888 0258
infoAvdel-USA@infastech.com

Manual No.	Issue	Change Note No.
07900-00361	B	07/044
	B2	07/103
	B3	07/359
	B4	11/082

www.avdel-global.com
www.infastech.com

Autosert® (equipment), Avbolt®, Avdel®, Avdelmate®, Avdel TX2000®, Avdelok®, Avex®, Avibulb®, Avinox®, Avinut™, Avlug®, Avmatic®, Avplas®, Avseal®, Avsert®, Avtainer®, Avtronic®, Briv®, Bulbex®, Chobert®, Eurosert®, Fastriv®, Finsert®, Genesis®, Grovit®, Hemlok®, Hexsert®, Holding your world together®, Hydra®, Interlock®, Klamp-Tite®, Klamptite KTR®, Kvex®, Maxlok®, Monobolt®, Monobulb®, Neobolt®, Nutsert®, Nutsert SQ®, Portariv®, Rivmatic®, Rivscrew®, Speed Fastening®, Squaresert®, Stavex®, Supersert®, Thin Sheet Nutsert®, Titan®, T-Lok®, TLR®, TSN®, TX2000®, Versa-Nut®, Viking® and Viking 360® are trademarks of Avdel UK Limited. Infastech™ and Our Technology, Your Success™ are trademarks of Infastech Intellectual Properties Pte Ltd. The names and logos of other companies mentioned herein may be trademarks of their respective owners. This document is for informational purposes only. Infastech makes no warranties, expressed or implied, in this document. Data shown is subject to change without prior notice as a result of continuous product development and improvement policy. Your local Avdel representative is at your disposal should you need to confirm latest information.

02.2011 • © 2010 Infastech