TEXTRON Fastening Systems
Commercial Solutions

Genesis G1

Quick Release Nose Equipment

QUICK RELEASE NOSE ASSEMBLY 71200-20310

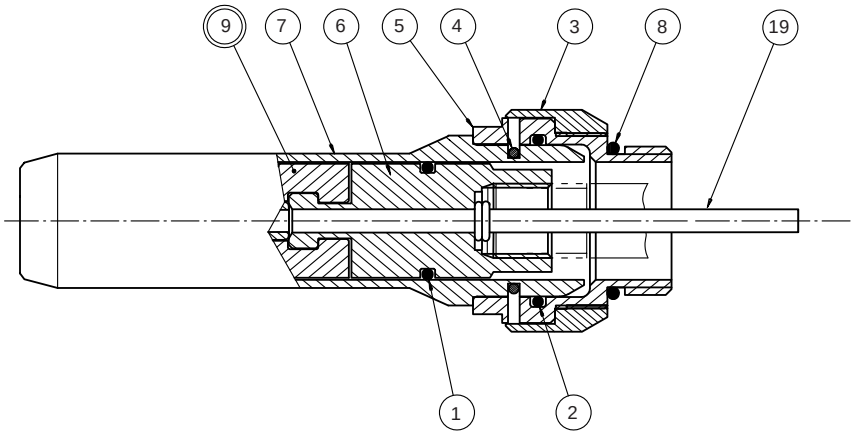

NOSE EQUIPMENT CARTRIDGE 71200-20320

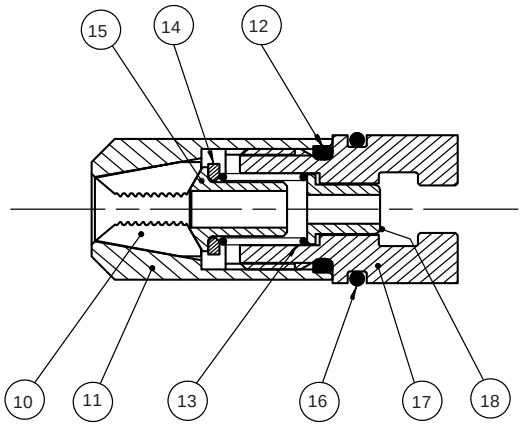

QUICK RELEASE NOSE ASSEMBLY 71200-20310			NOSE EQUIPMENT CARTRIDGE 71200-20320		
1	07003-00277	'O' Ring	10	71200-15001	Jaw
2	07003-00342	'O' Ring	11	07340-00304	Jaw Housing
3	71210-20311	Spring Cover	12	07003-00349	'O' Ring
4	71210-20312	'U' Spring	13	07498-004301	Spring
5	71210-20313	Nose Case Adaptor	14	71210-05001	Buffer
6	71200-20330	'T' Adaptor	15	71200-20312	Jaw Spreader
7	71210-20316	Quick Release Nose Casing	16	07003-00277	'O' Ring
8	07003-00349	'O' Ring	17	71210-20321	Jaw Spreader Housing 'T'
9	71210-20320	Nose Equipment Cartridge (see items 10 to 18)	18	71210-20322	Detent Sleeve
19	71200-20311	Vacuum Tube			

Textron Fastening Systems Limited
Mundells, Welwyn Garden City, Hertfordshire AL7 1EZ United Kingdom
Telephone +44 (0) 1707 668668 Facsimile +44 (0) 1707 338828

Avdel®

TEXTRON Fastening Systems
Commercial Solutions

Genesis G1

Quick Release Nose Equipment

TO ASSEMBLE QUICK RELEASE NOSE EQUIPMENT TO G1 TOOL (71200-02000)

(Refer to 71200-02000s Drawing or G1 Instruction Manual.)

1. Remove Jaw Spreader Housing (71200-02016).
2. Insert Vacuum Tube (item 19) into front of Piston (71200-02120).
3. Screw 'T' Adaptor (item 6) and 'O' Ring (item 1). Fully tighten 'T' Adaptor onto Piston (71200-02120) before locking in position with Locknut (07002-00154).
4. Push Quick Release Nose Case Adaptor Assembly (items 2, 3, 4, 5 and 8) over 'T' Adaptor (item 6) and screw into front of tool.
5. The Nose Equipment Cartridge Assembly (item 9) is assembled onto the 'T' Adaptor (item 6) by sliding in a plane normal to the Piston.
6. Align the spanner flats on the Quick Release Nose Casing (item 7) with the flats on the Nose Case Adaptor (item 5).
7. Push Quick Release Nose Casing (item 7) into the Nose Case Adaptor Assembly (items 2, 3, 4, 5 and 8).

TO REMOVE THE NOSE CASING

(Spanner flats on the Quick Release Nose Casing (item 7) and Nose Case Adaptor Assembly (items 2, 3, 4, 5 and 8) should be aligned.)

1. Rotate Quick Release Nose Casing (item 7) through 90°. Pull Quick Release Nose Casing (item 7) out of the Nose Case Adaptor Assembly (items 2, 3, 4, 5 and 8)
2. The Nose Equipment Cartridge (item 9) is removed by sliding in a plane normal to the Piston.

TO REPLACE THE NOSE CASING

1. Align the spanner flats on the Quick Release Nose Casing (item 7) with the flats on the Nose Case Adaptor (item 5).
2. Push Quick Release Nose Casing (item 7) into Nose Case Adaptor Assembly (items 2, 3, 4, 5 and 8).

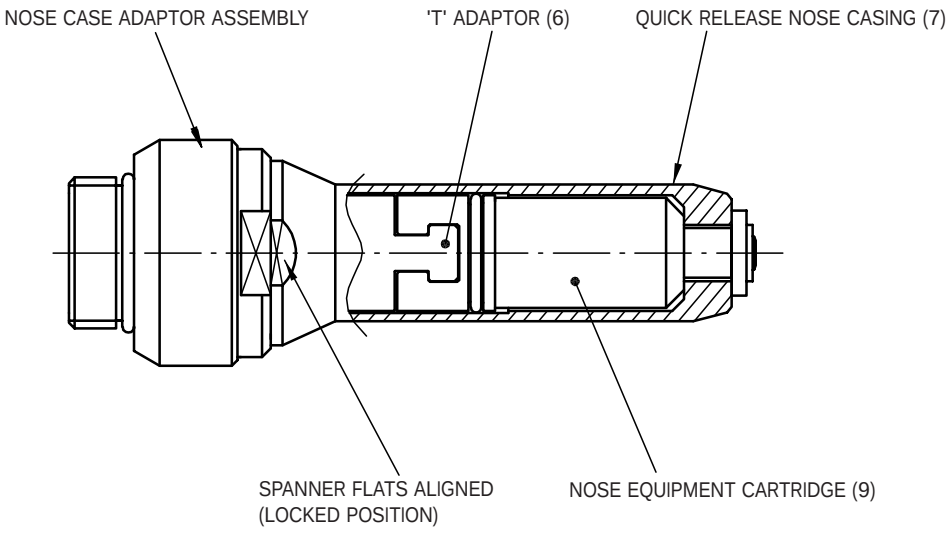

© TEXTRON FASTENING SYSTEMS **07900-00817** JANUARY 2002

Textron Fastening Systems Limited
Mundells, Welwyn Garden City, Hertfordshire AL7 1EZ United Kingdom
Telephone +44 (0) 1707 668668 Facsimile +44 (0) 1707 338828

Avdel®